RESKIT™

RESIN PARTS
FOR SCALE PLASTIC KITS

# A-7E "CORSAIR II"

## AIR INTAKES, WHEEL BAYS, LANDING GEARS, WHEELS WITH CATAPULT SHUTTLE AND HOLDBACK BAR FOR HASEGAWA KIT

INSTRUCTION **RSU48-0316**

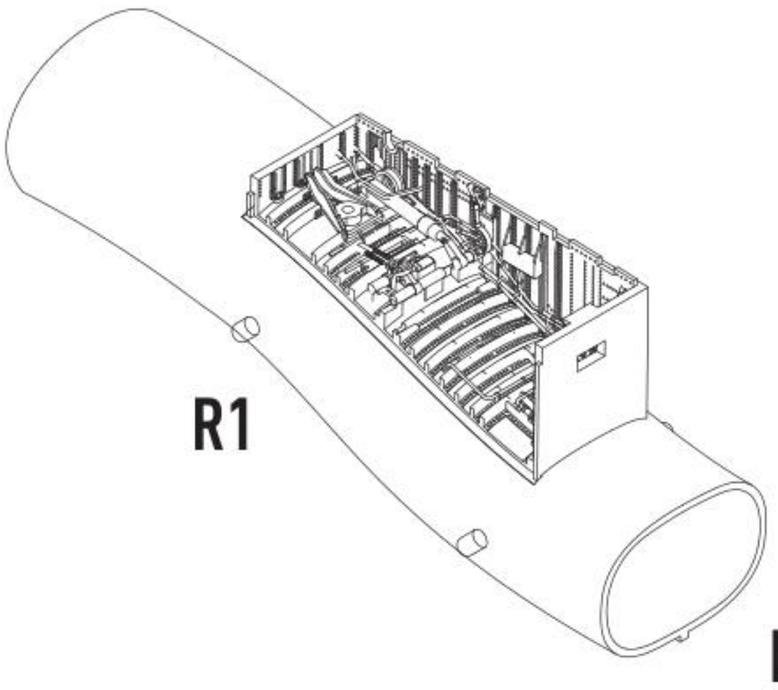


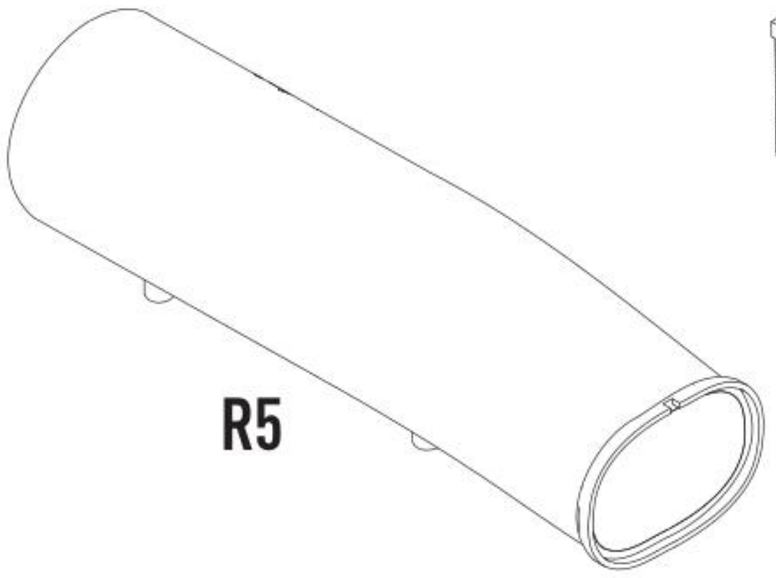


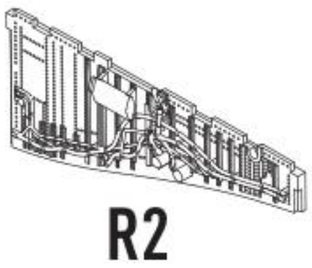


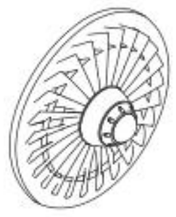


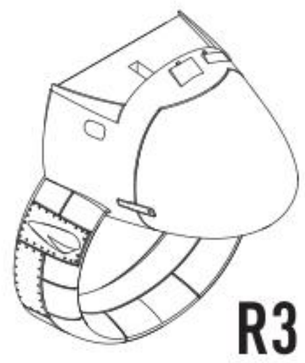


DETAILS AFTER REMOVAL FROM SUPPORTS

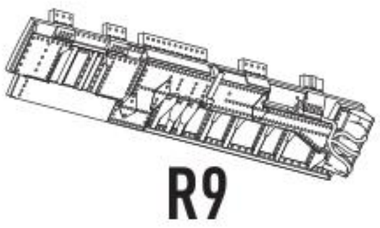


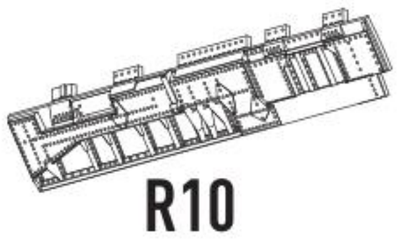


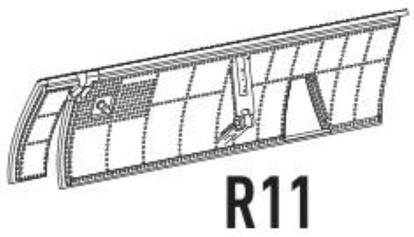

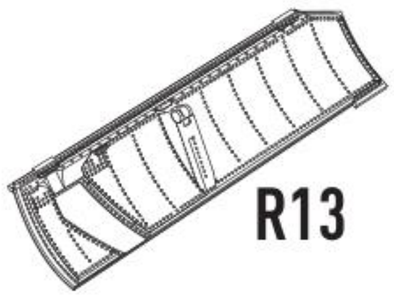


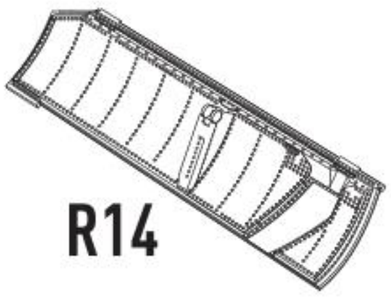

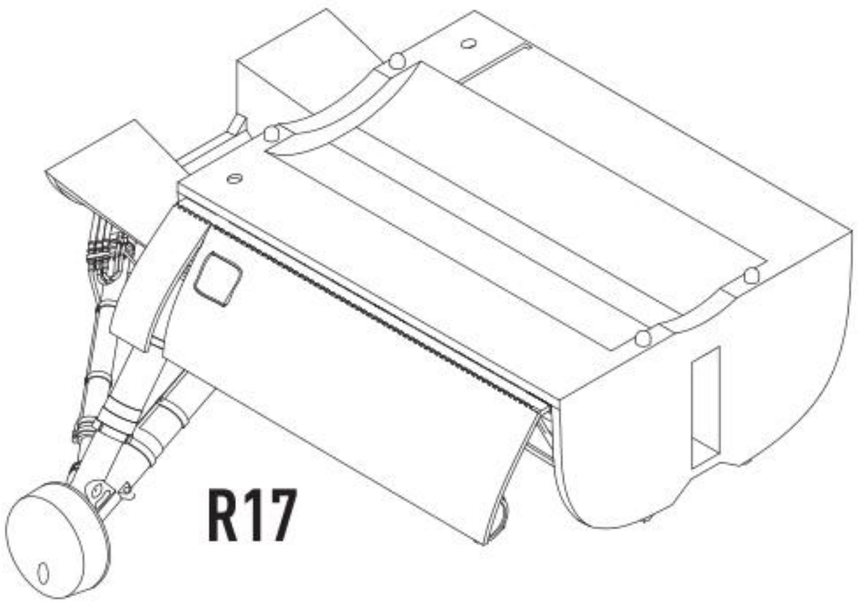


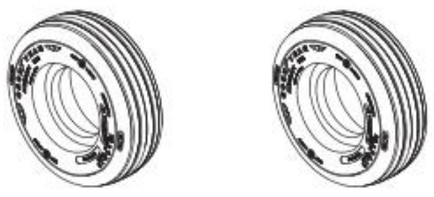


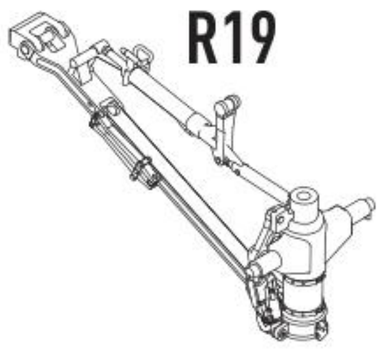

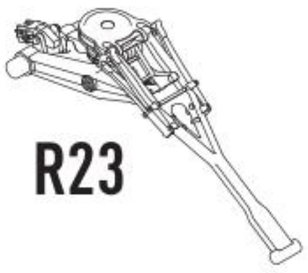

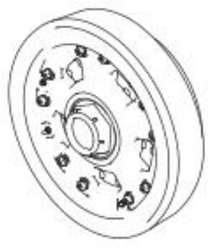


general Issues: info@reskit.com.ua / claim resolution: claims@reskit.com.ua

RESKIT-MODELS.COM

fb.com/reskit.official instagram.com/reskit_official pinterest.com/reskit_official

# 1 PREPARING FUSELAGE PARTS FOR INSTALLATION OF AN ADDITIONAL KIT

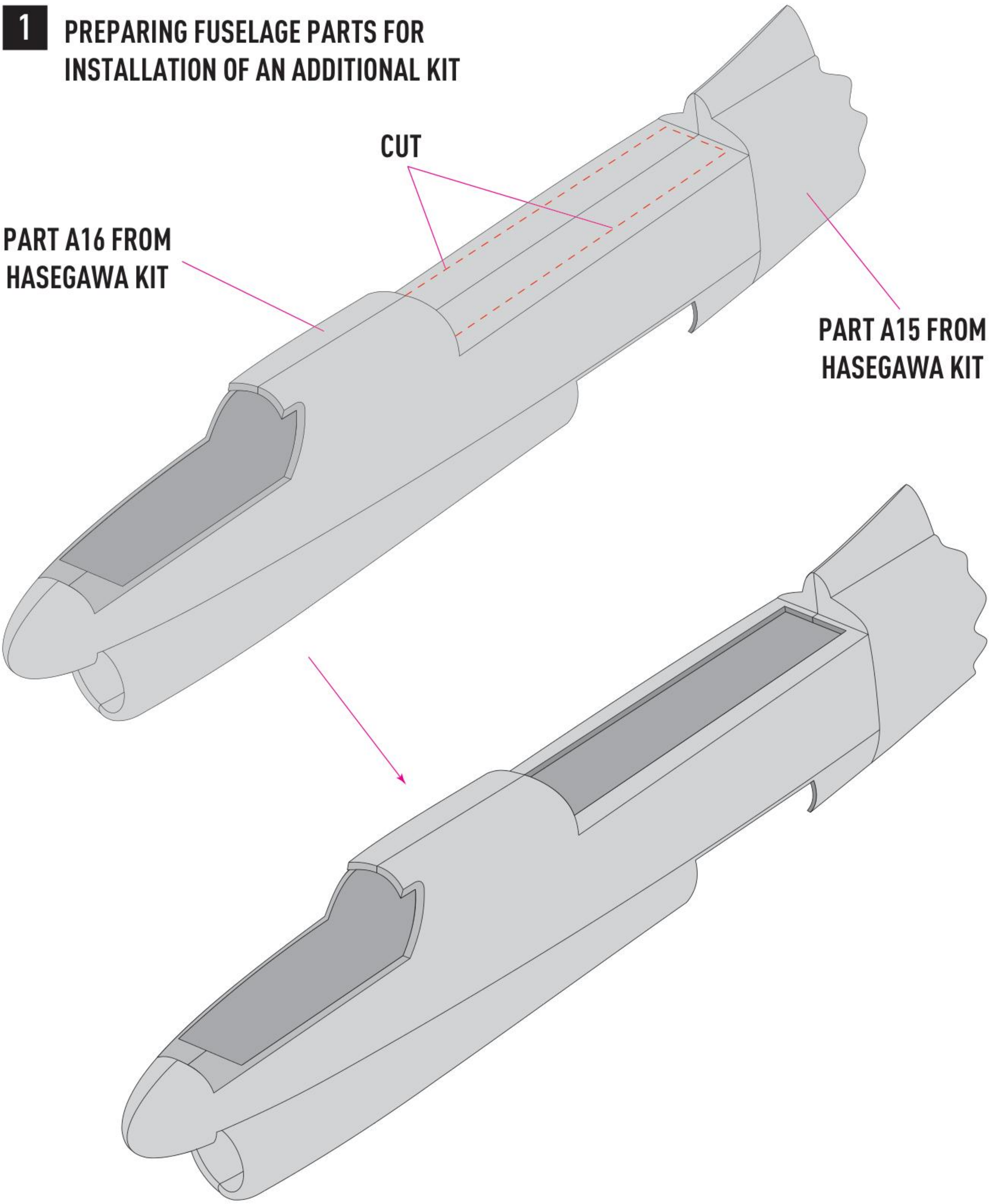


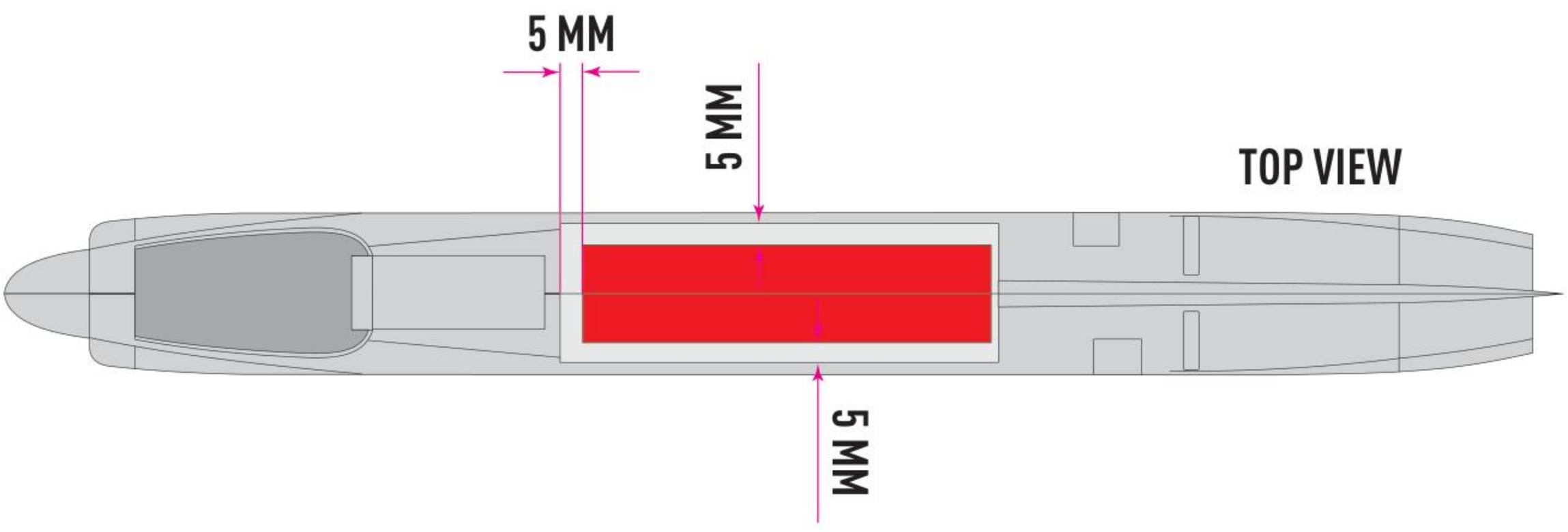

2

CUT OUT FRAGMENTS OF STERN NICHES ACCORDING TO SCHEME

STEP 1

EXPAND THE OPENING OF THE NOSE PILLAR TO THE LEFT AND RIGHT BY 0.5 MM

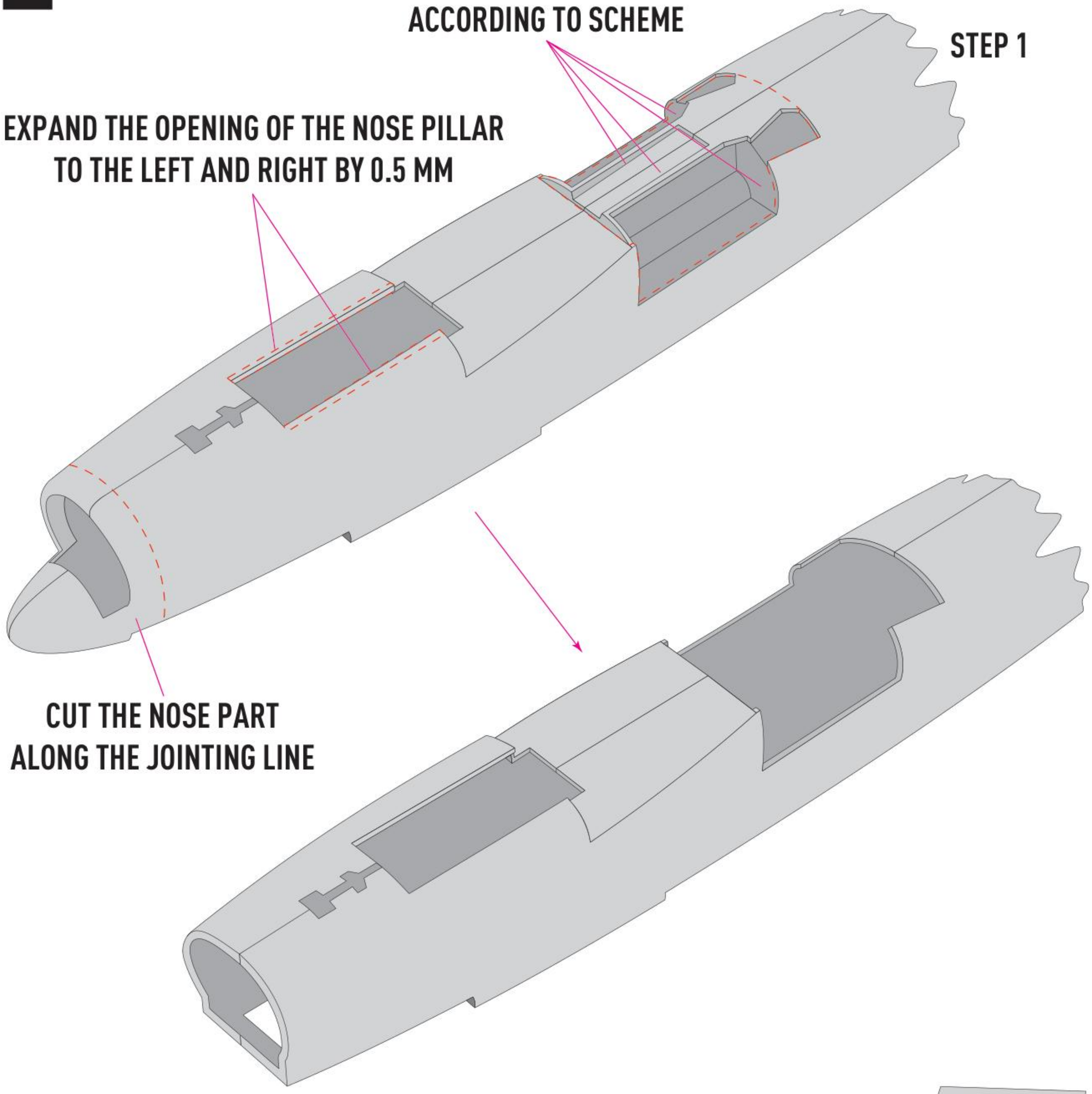

CUT THE NOSE PART ALONG THE JOINTING LINE

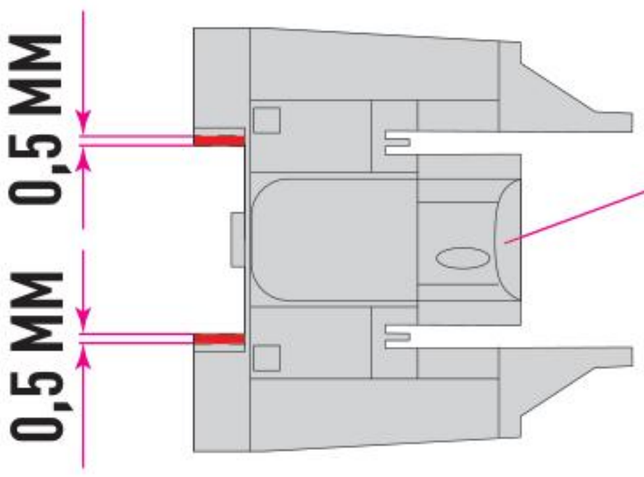


PART A19 FROM HASEGAWA KIT

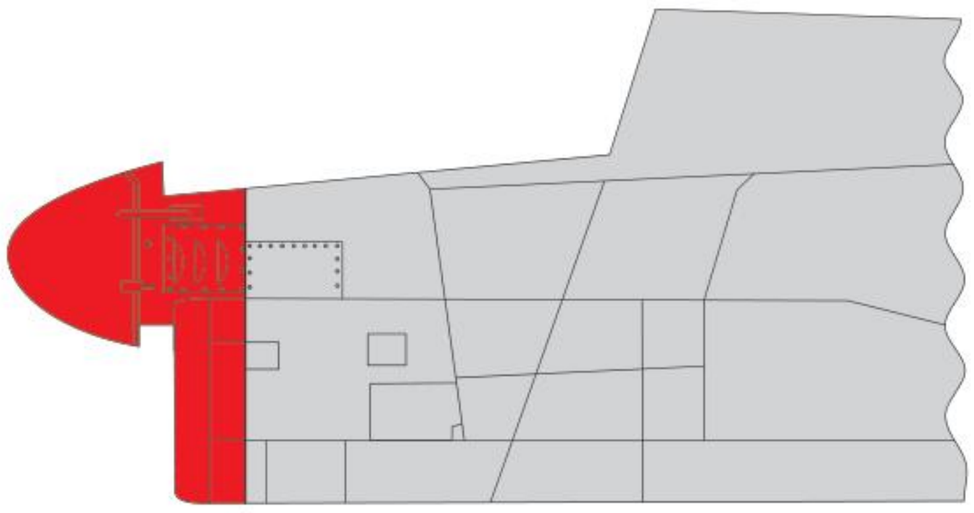

CUT THE NOSE PART ALONG THE JOINTING LINE

WIDEN THE OPENING TO THE LEFT AND RIGHT BY 0.5 MM

0,8 MM

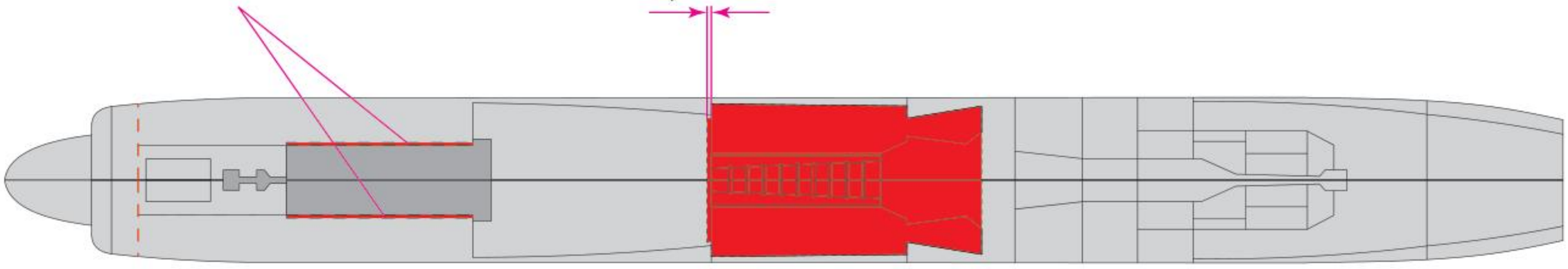

3

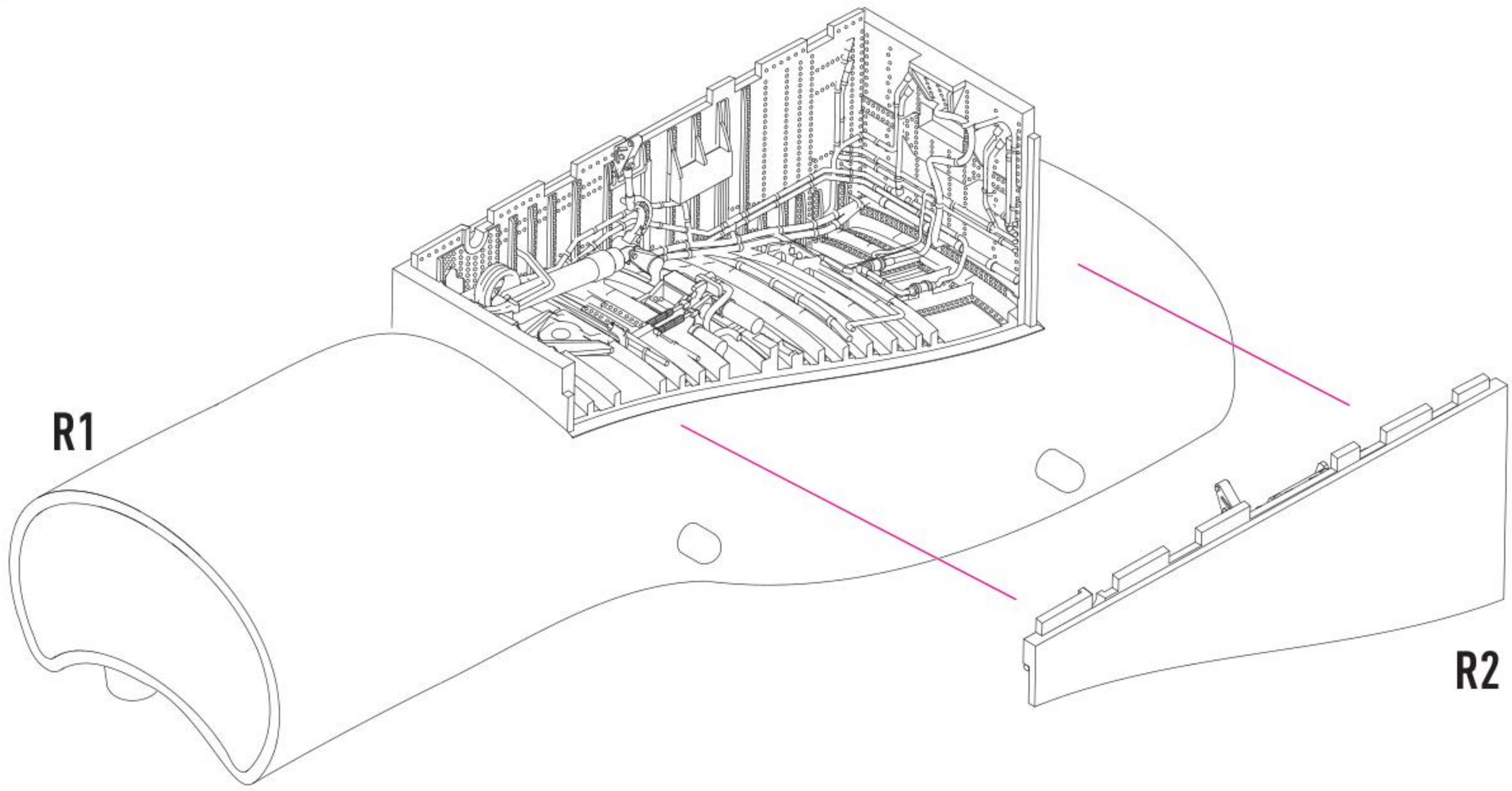


4

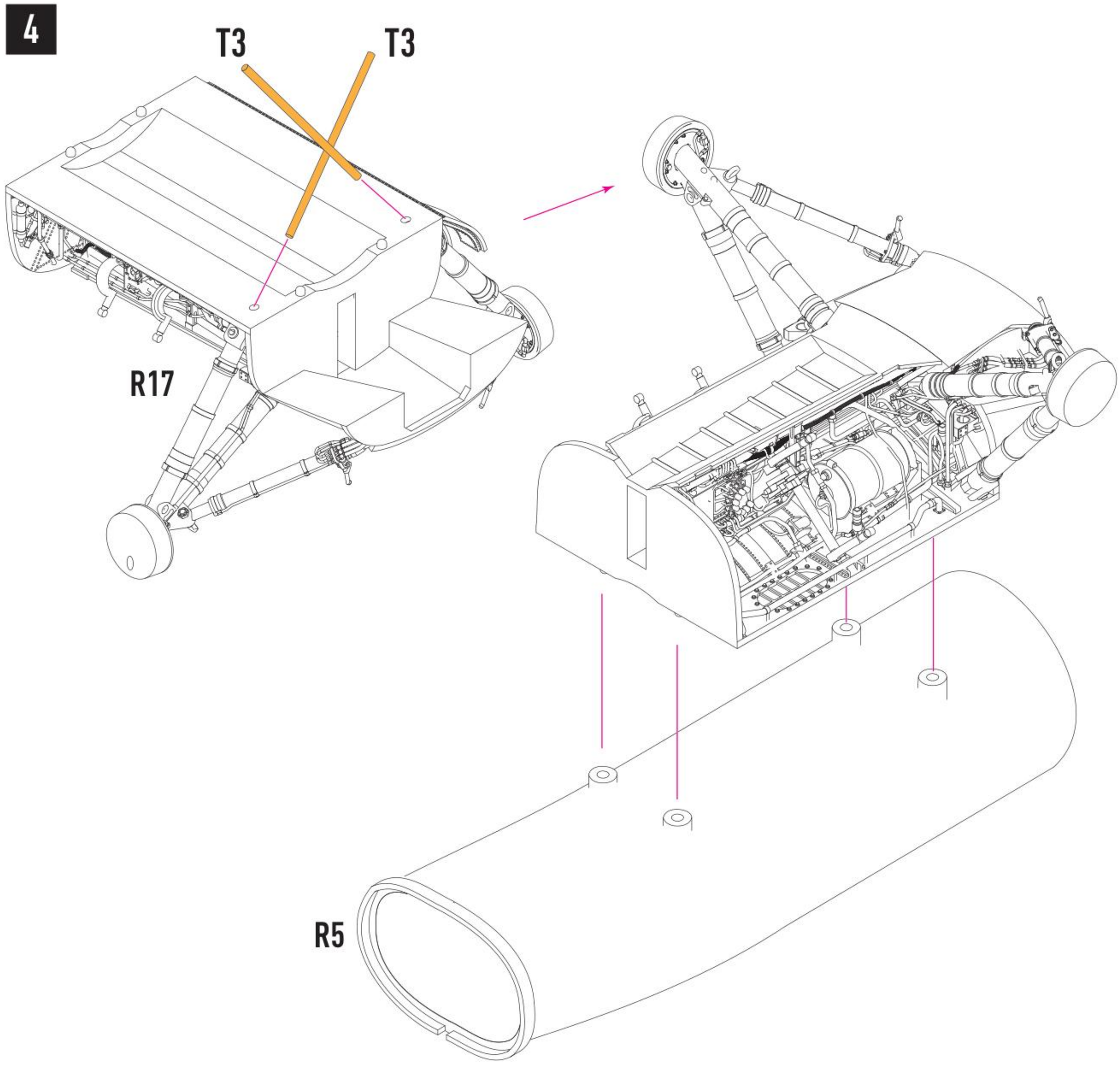

5

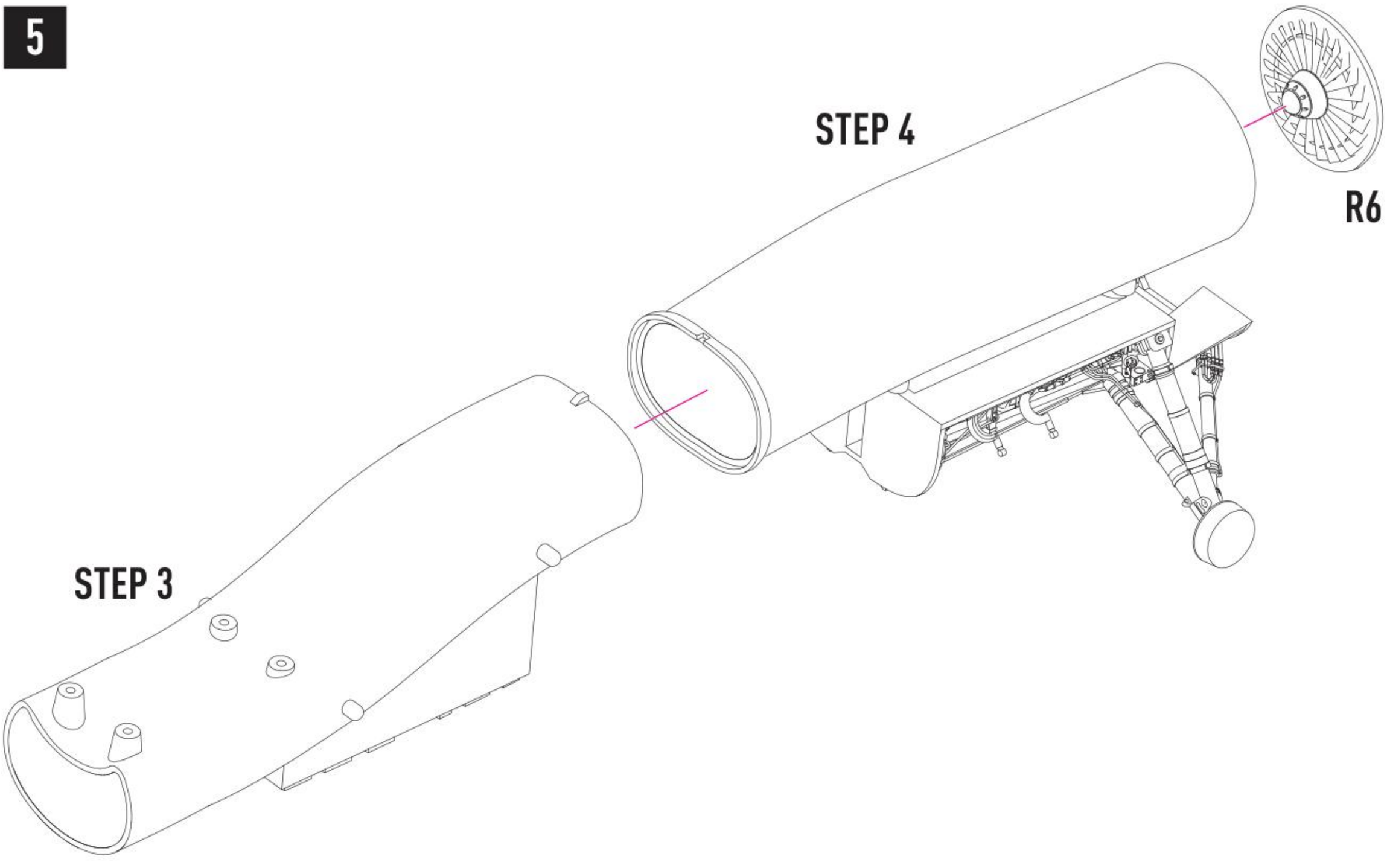


6

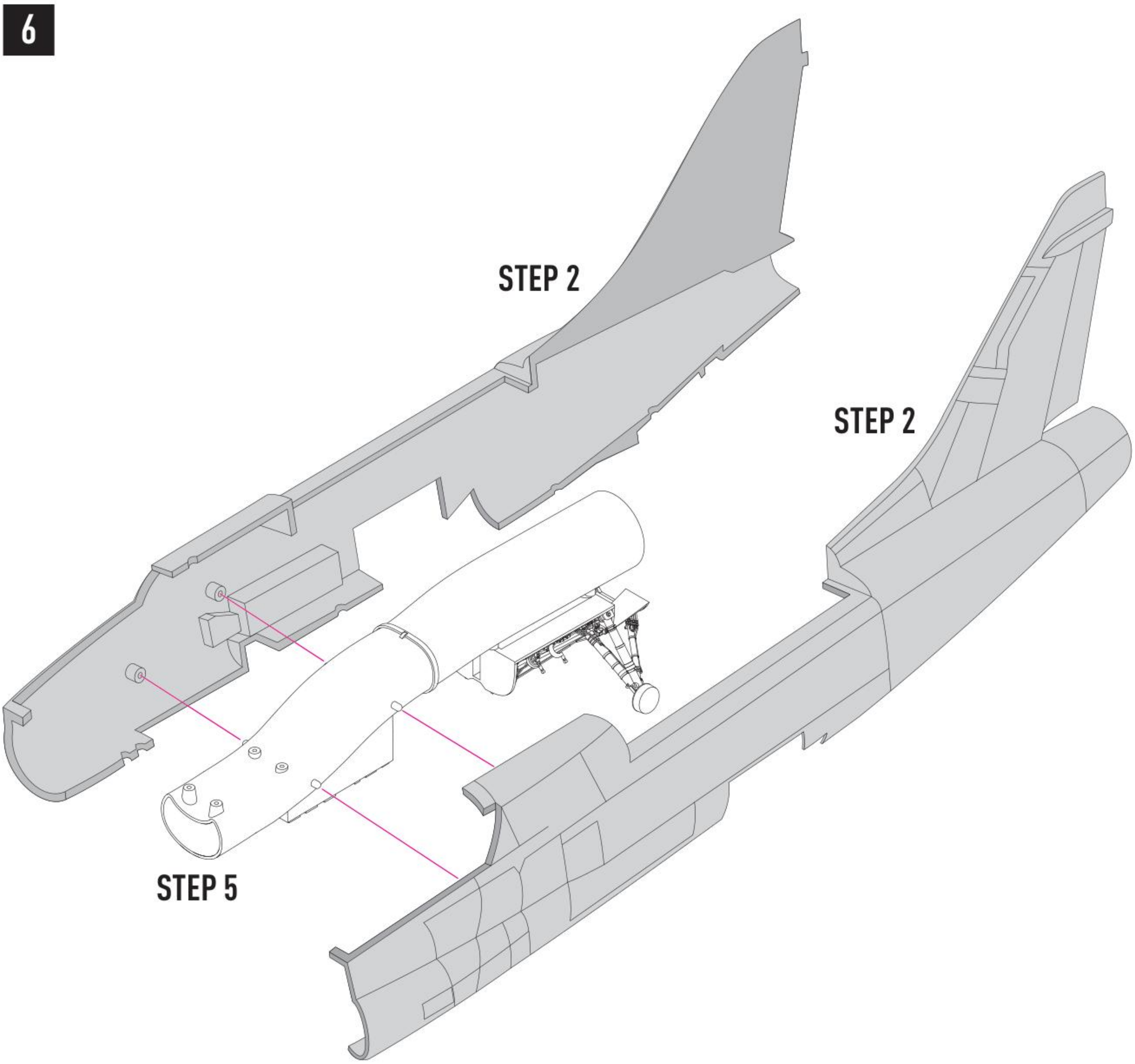

# 7 FRONT LANDING GEAR ASSEMBLY

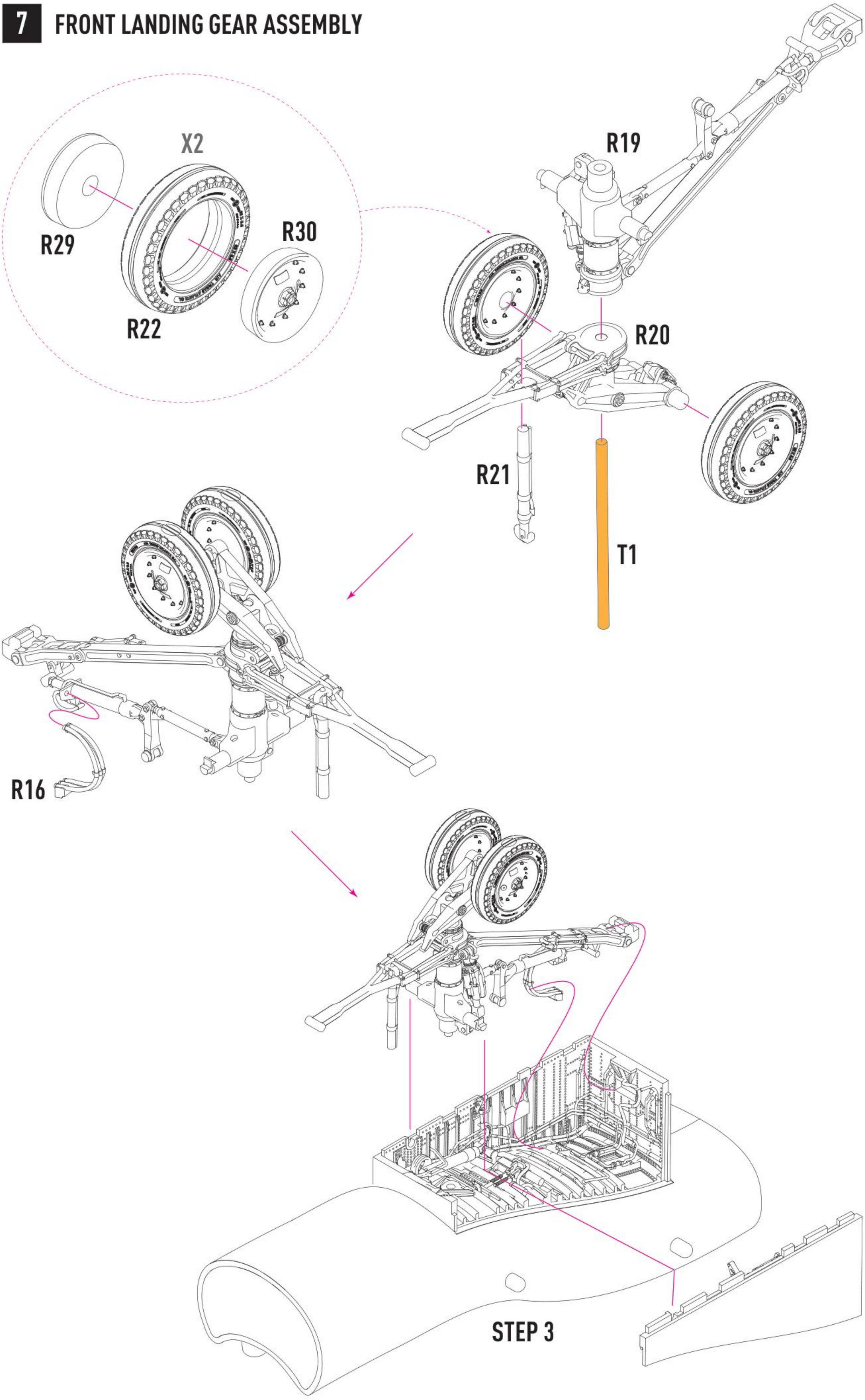

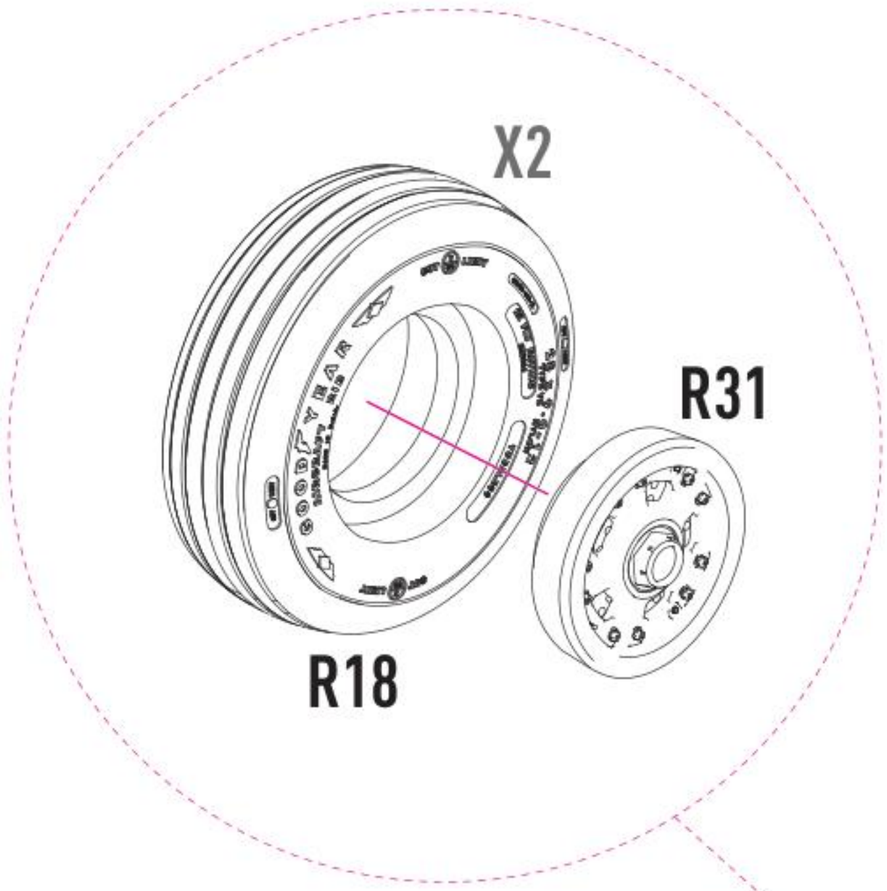
X2
R31
R18

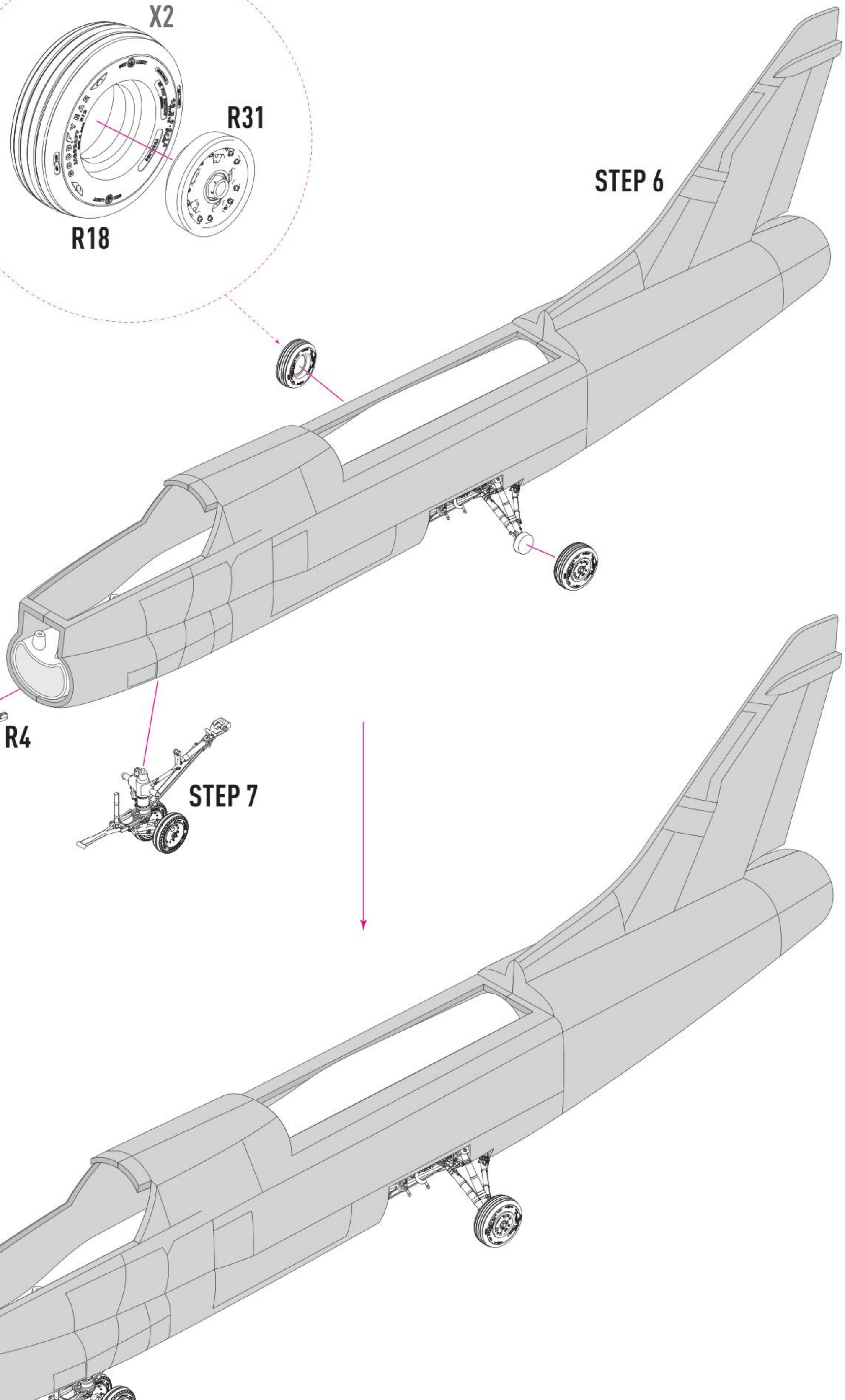
STEP 6
R4
R4
R3
STEP 7

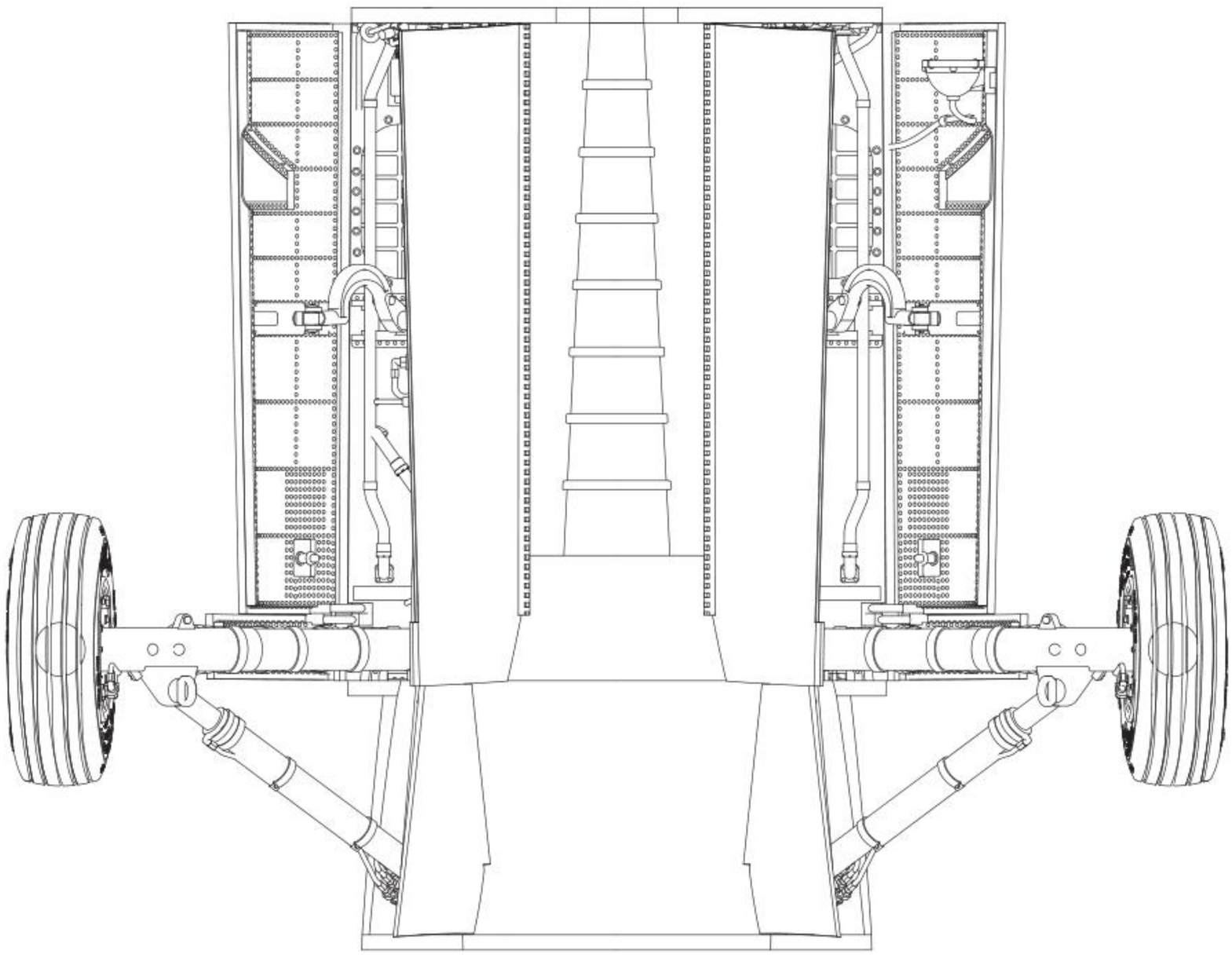

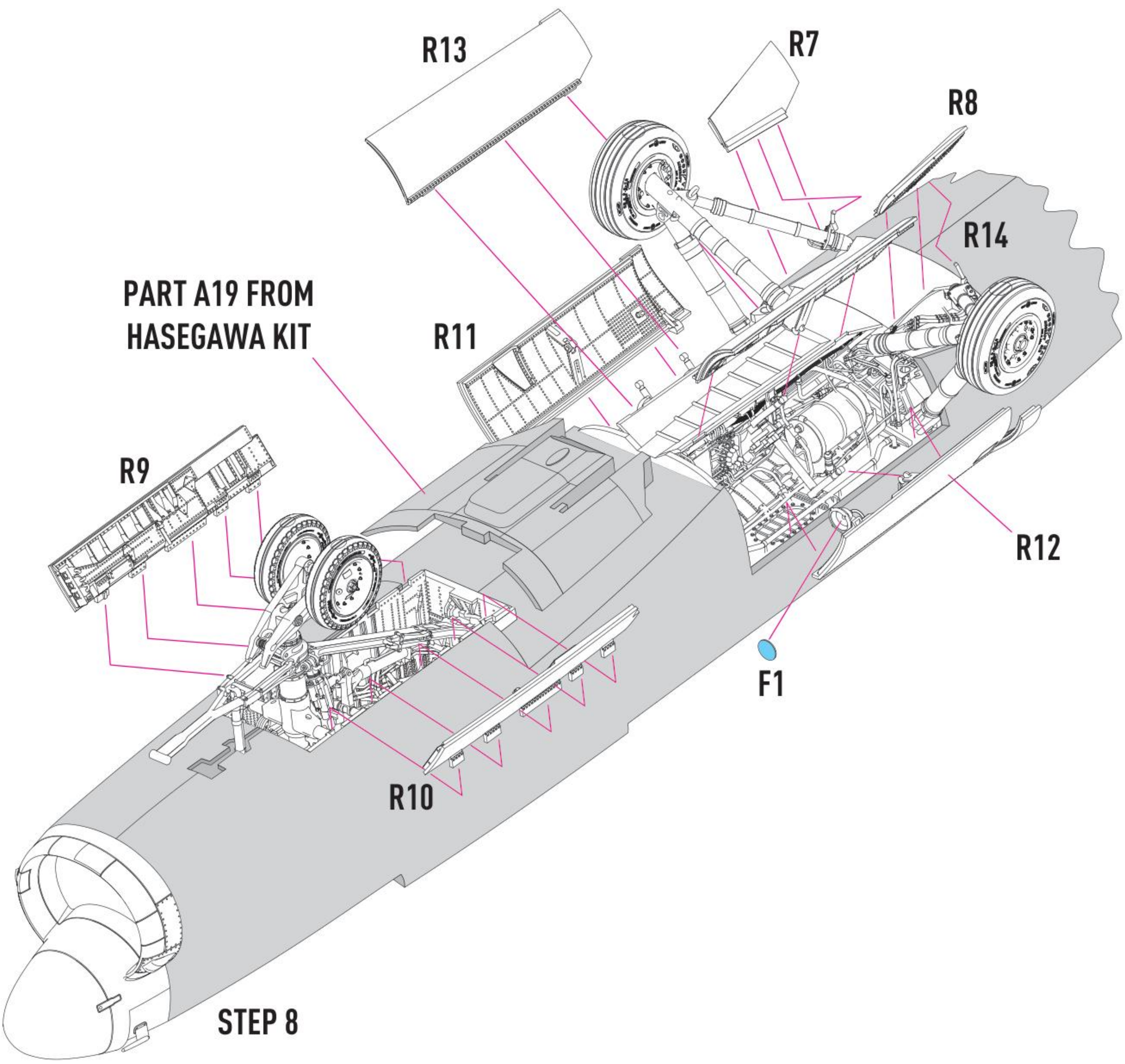


STEP 8

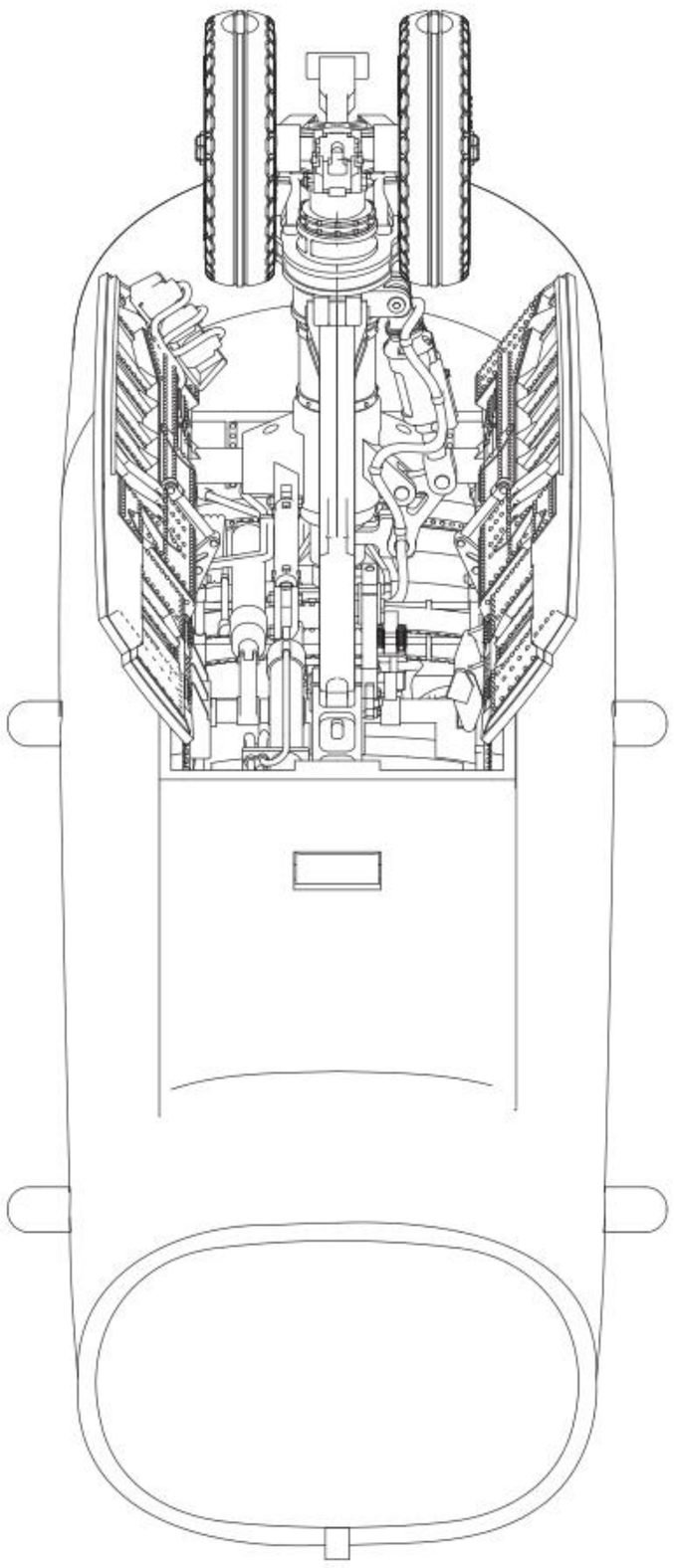

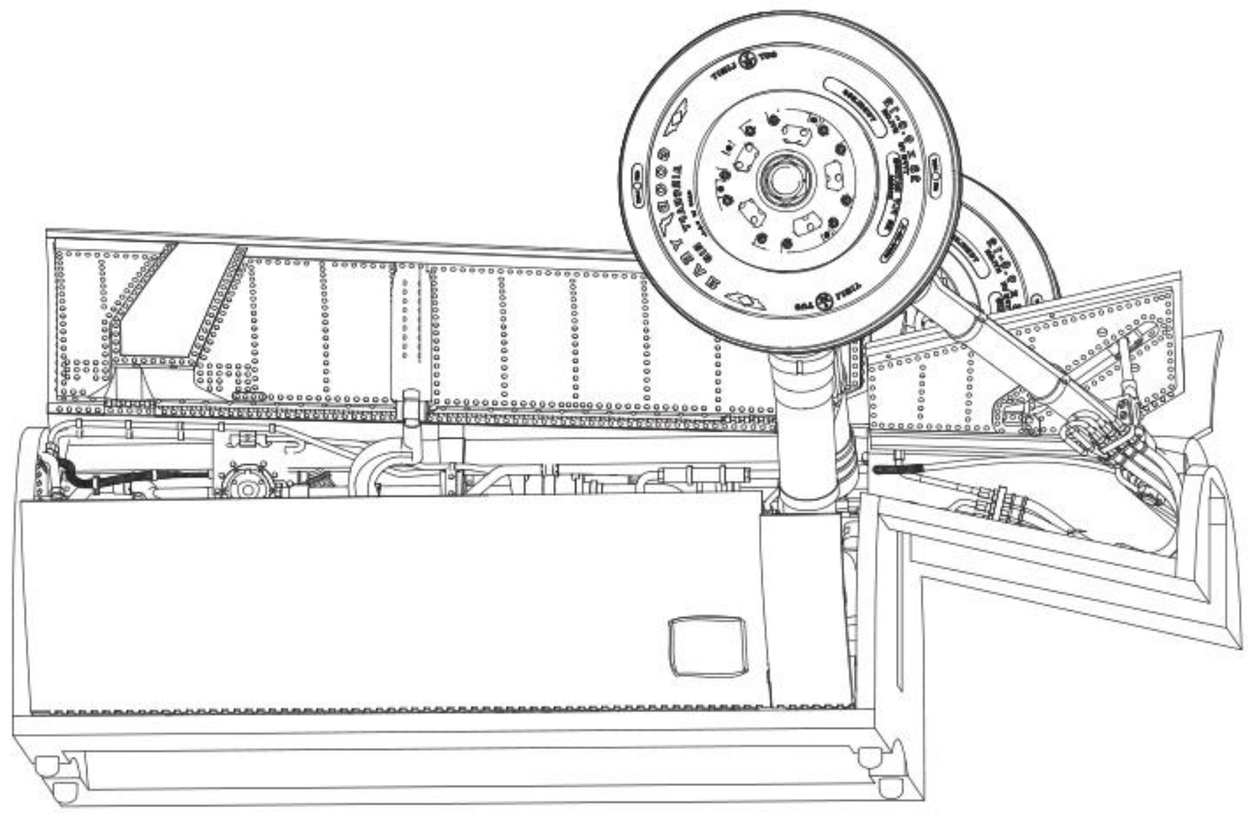

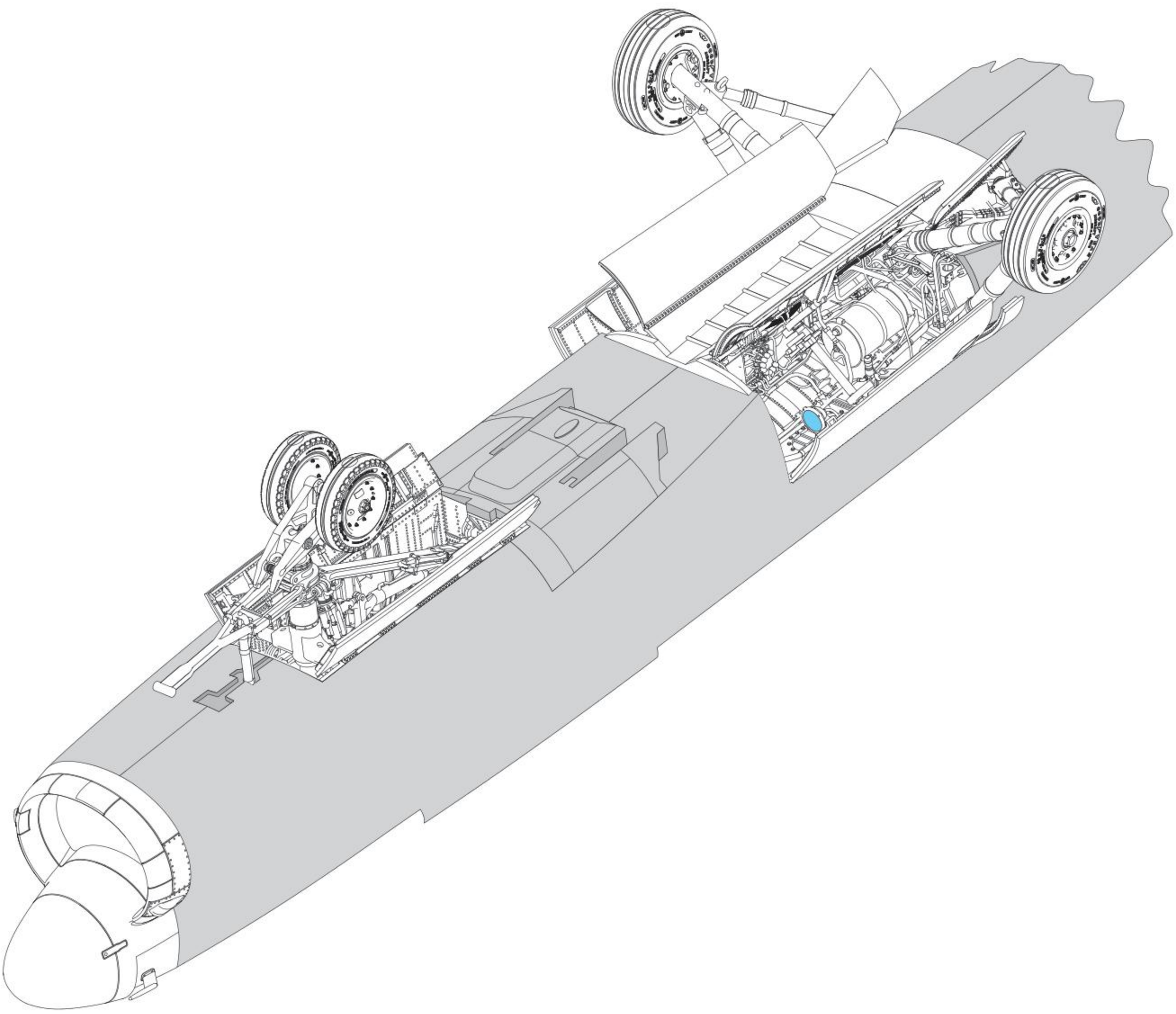

# 10 FRONT LANDING GEAR ASSEMBLY
# INSTALLATION IN THE CATAPULT IN THE PRE-LAUNCH POSITION

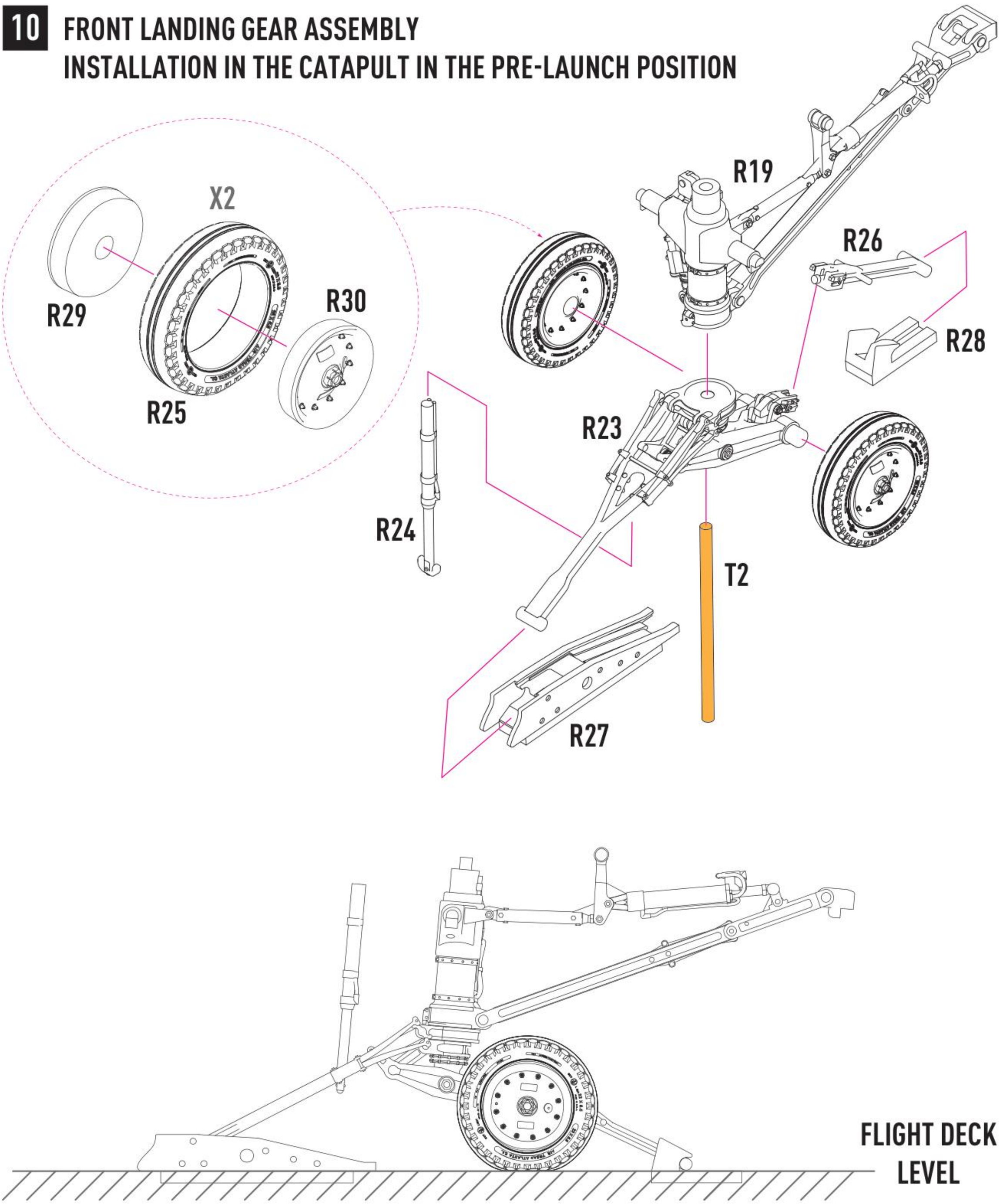


## ASSEMBLY AND INSTALLATION OF PARKING BLOCKS

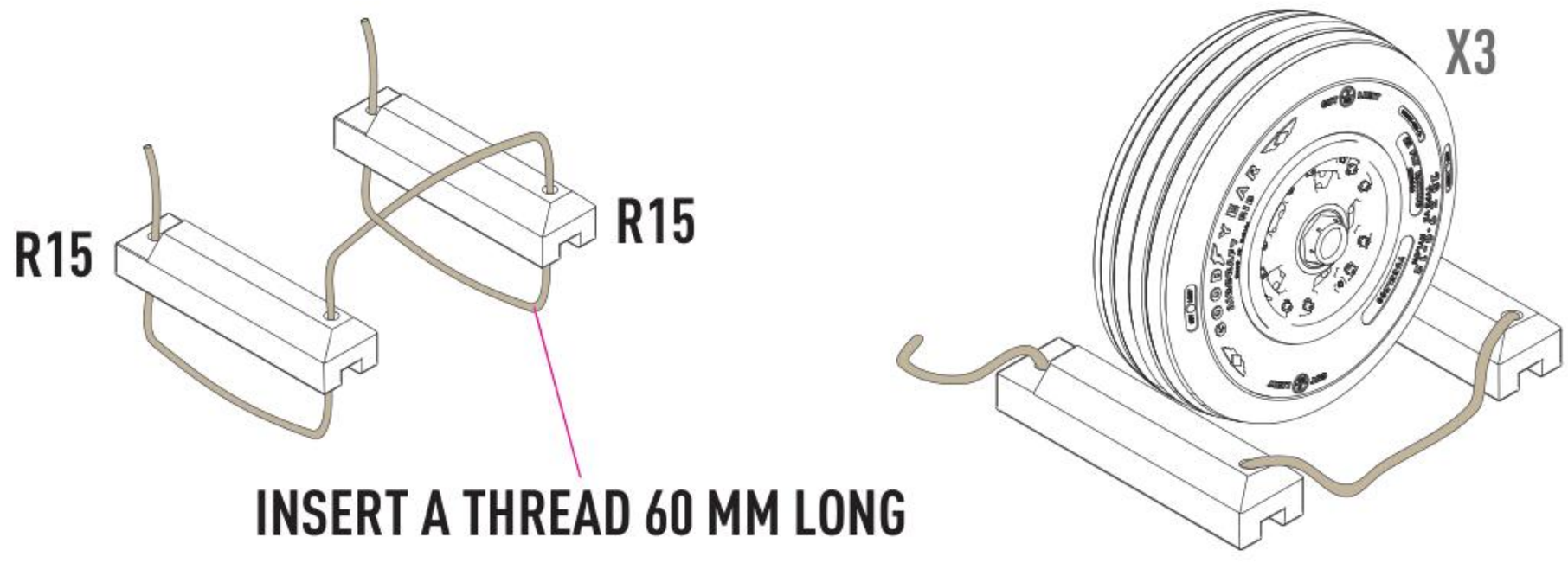

# DECAL INSTRUCTION

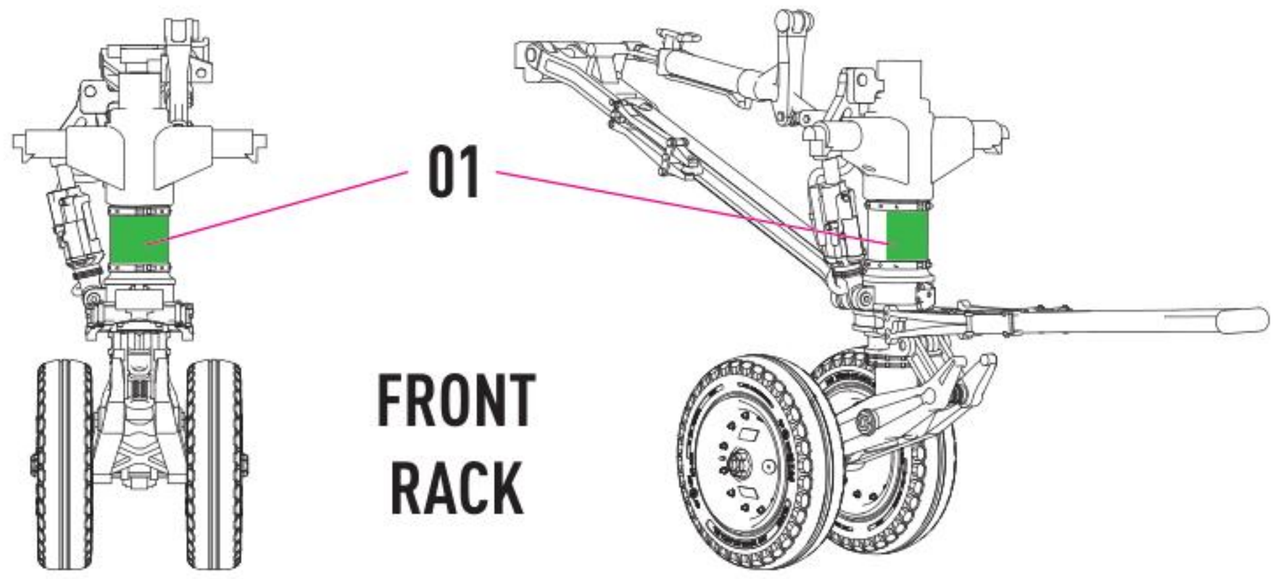


## FRONT RACK DOORS

LEFT SIDE

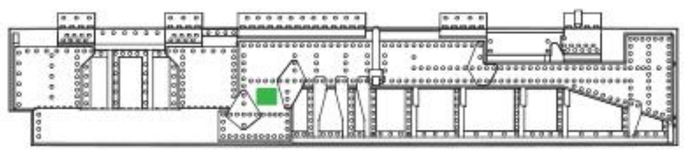

02

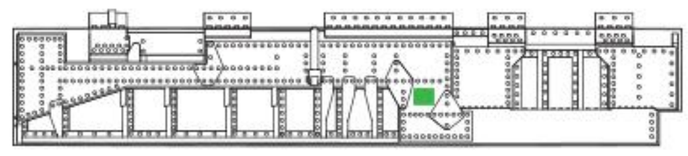

02

RIGHT SIDE

## 03 UPPER DOORS OF THE REAR RACK 03

LEFT SIDE

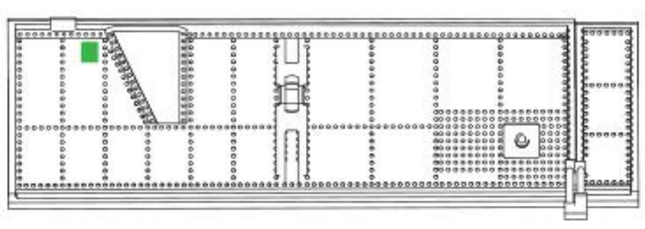

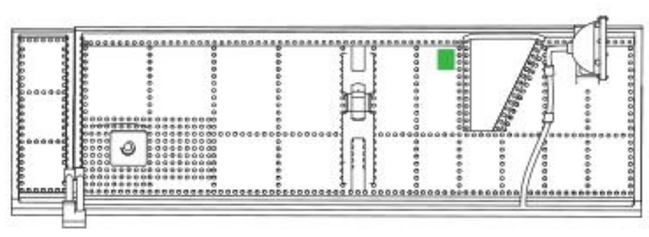

RIGHT SIDE

## LOWER DOORS OF THE REAR RACK

LEFT SIDE

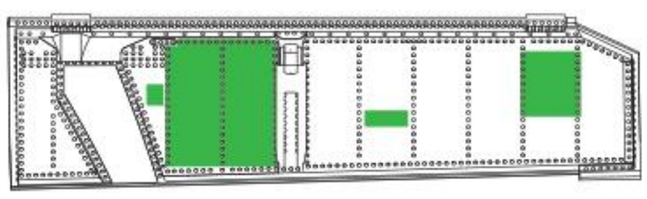

04 07 05 06

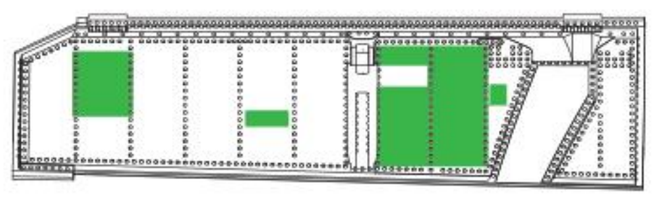

06 05 08 04

RIGHT SIDE

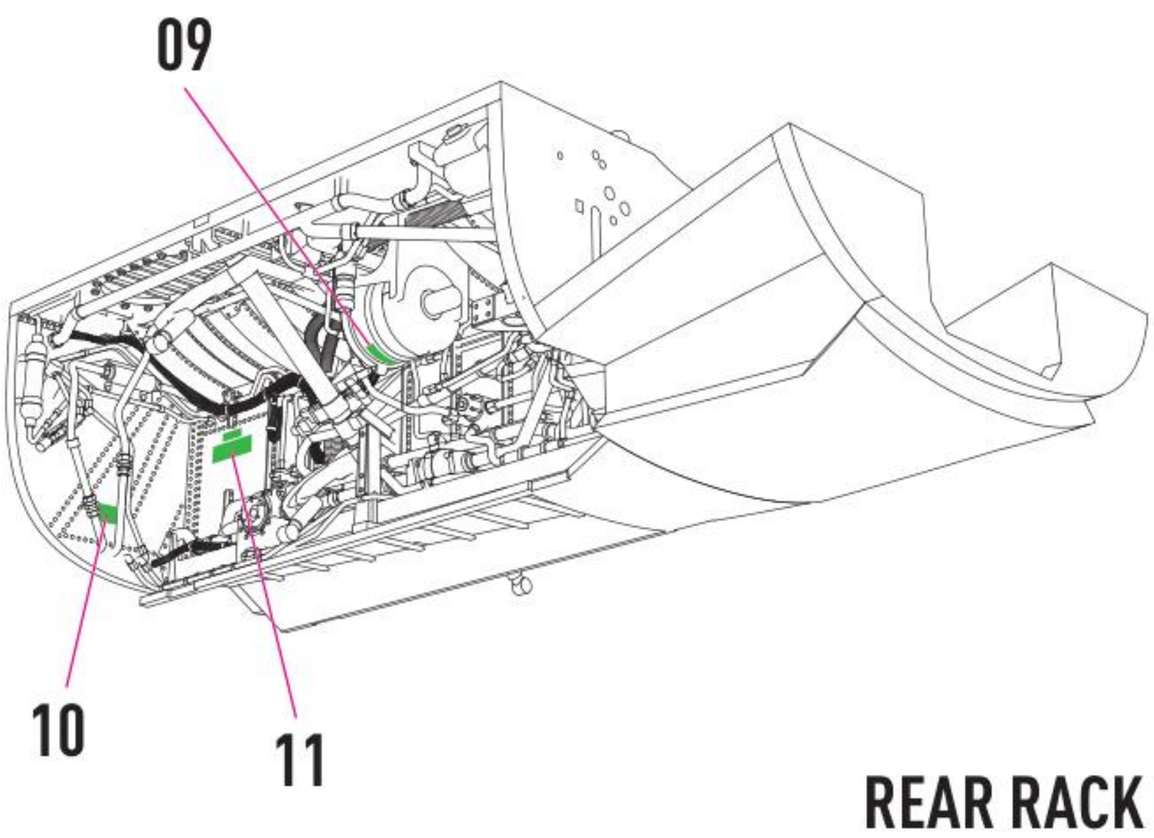


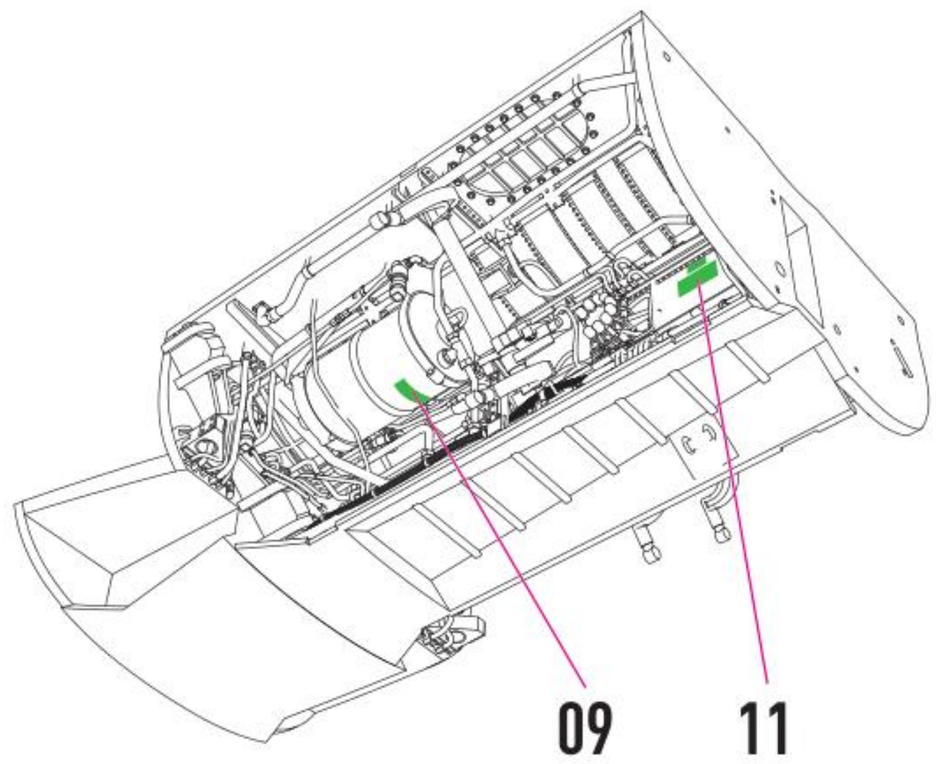


## REAR RACK REAR VIEW

12 13
OPTIONS

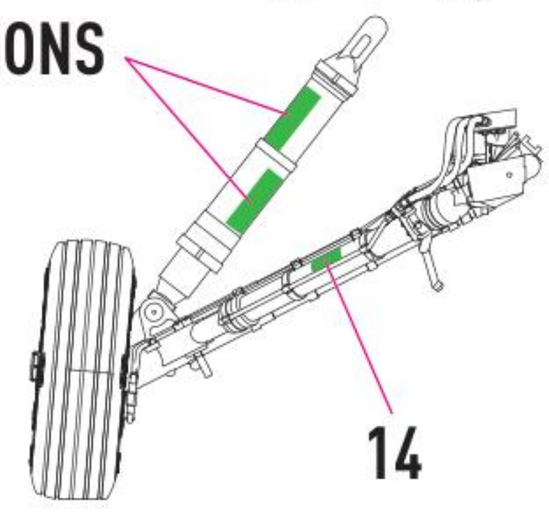

14

12 13
OPTIONS

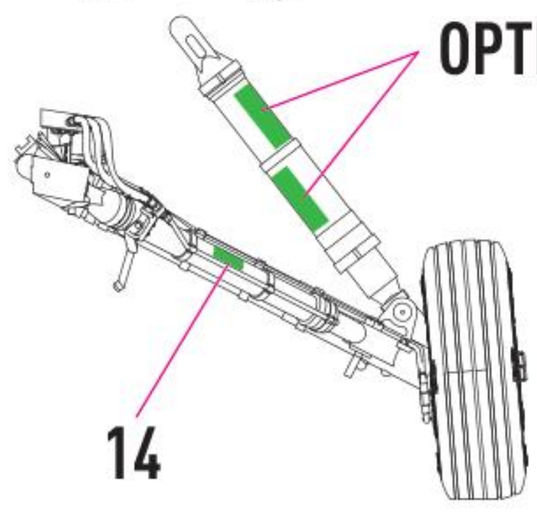

14

YOU CAN FIND INSTRUCTIONS
IN PDF FORMAT ON THE WEBSITE

RESKIT-MODELS.COM

General Issues: info@reskit.com.ua

Wholesales: sales@reskit.com.ua

Claim Resolution: claims@reskit.com.ua