RESKIT™

RESIN PARTS
FOR SCALE PLASTIC KITS

370 GALLON WING FUEL TANKS

WITH PYLONS (TYPE 2) FOR F-16 (2 PCS)

INSTRUCTION **RSU32-0145**

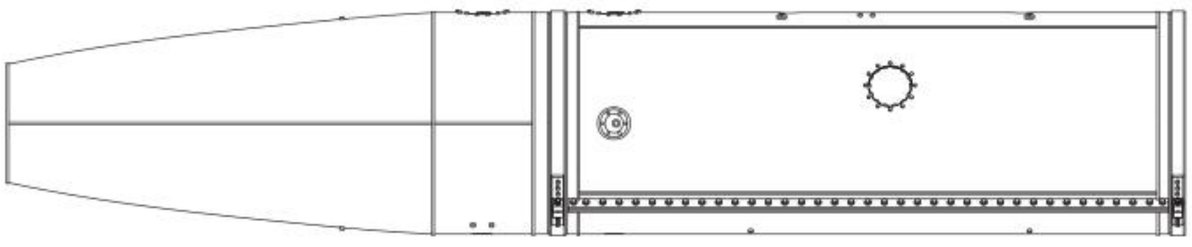

R1 X2

DETAILS AFTER REMOVAL FROM SUPPORTS

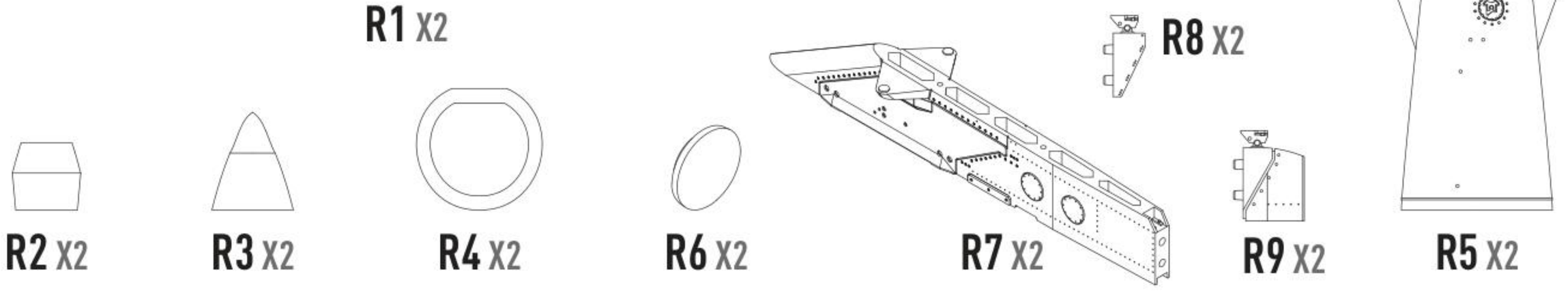

1 X2

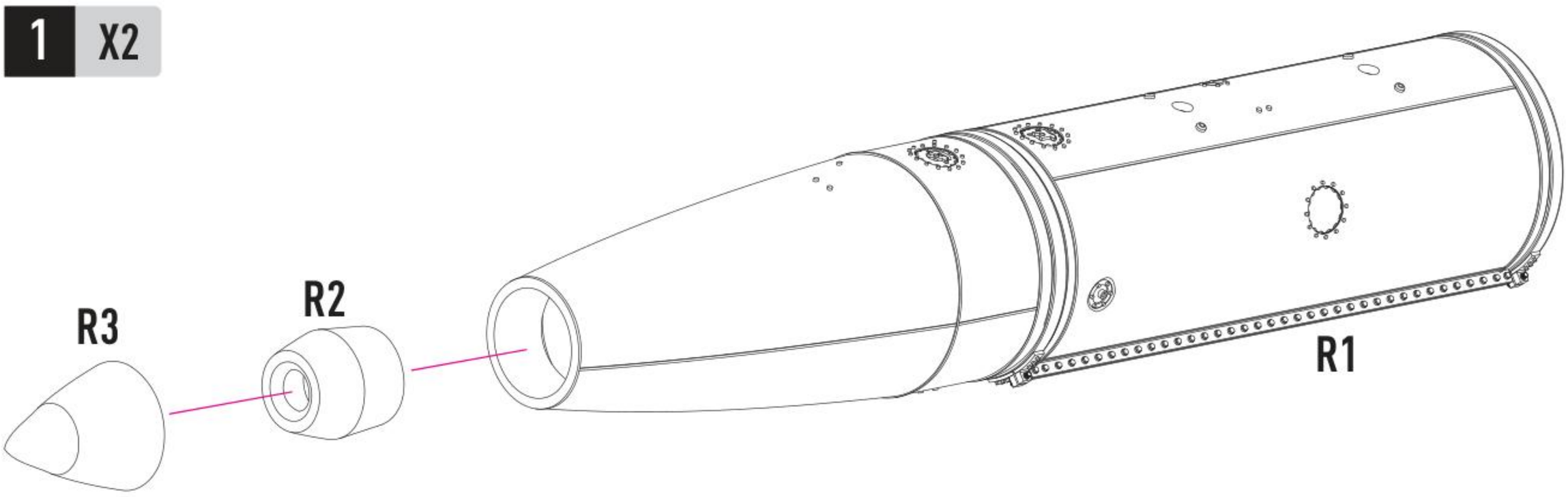

X2 2

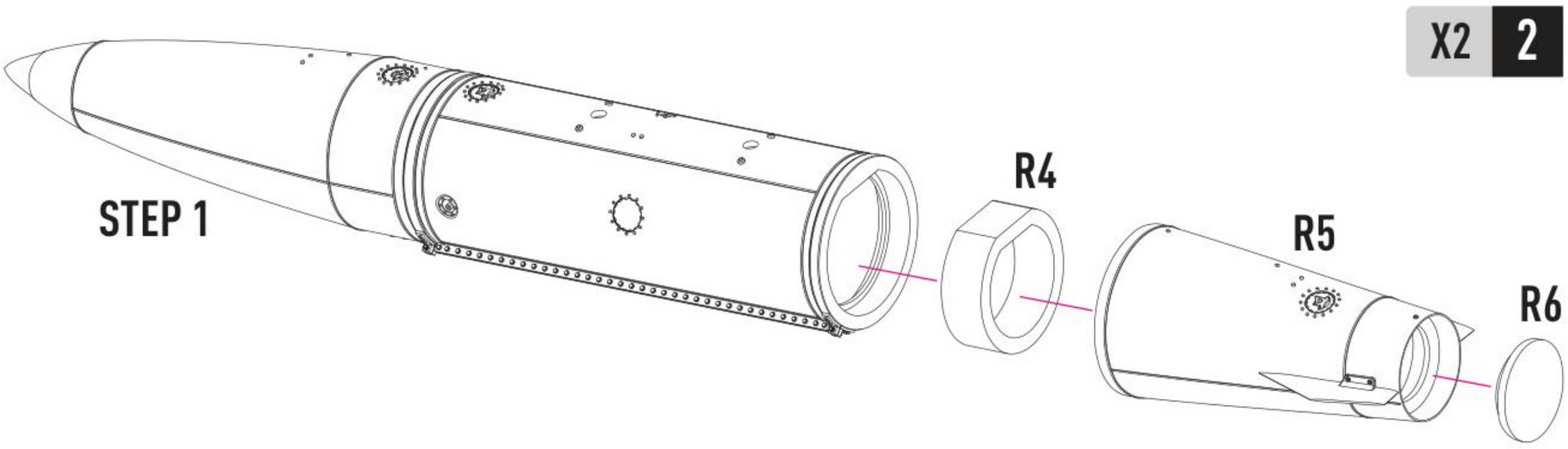

3 X2

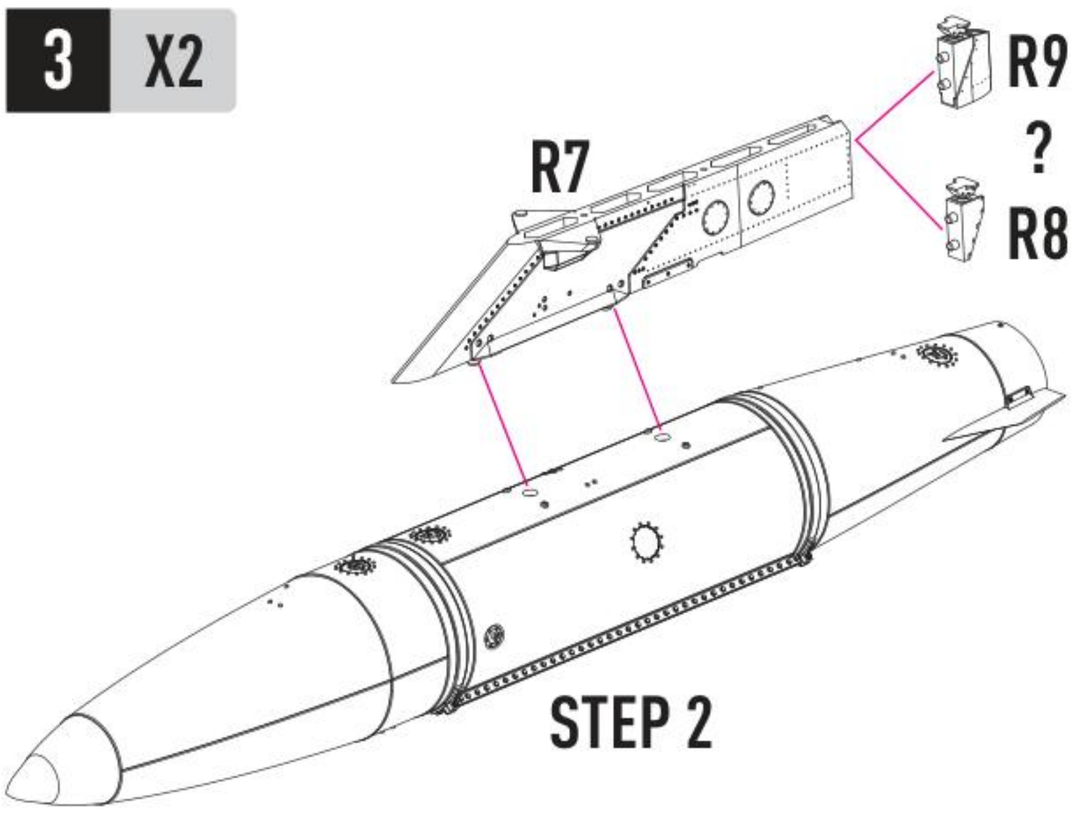

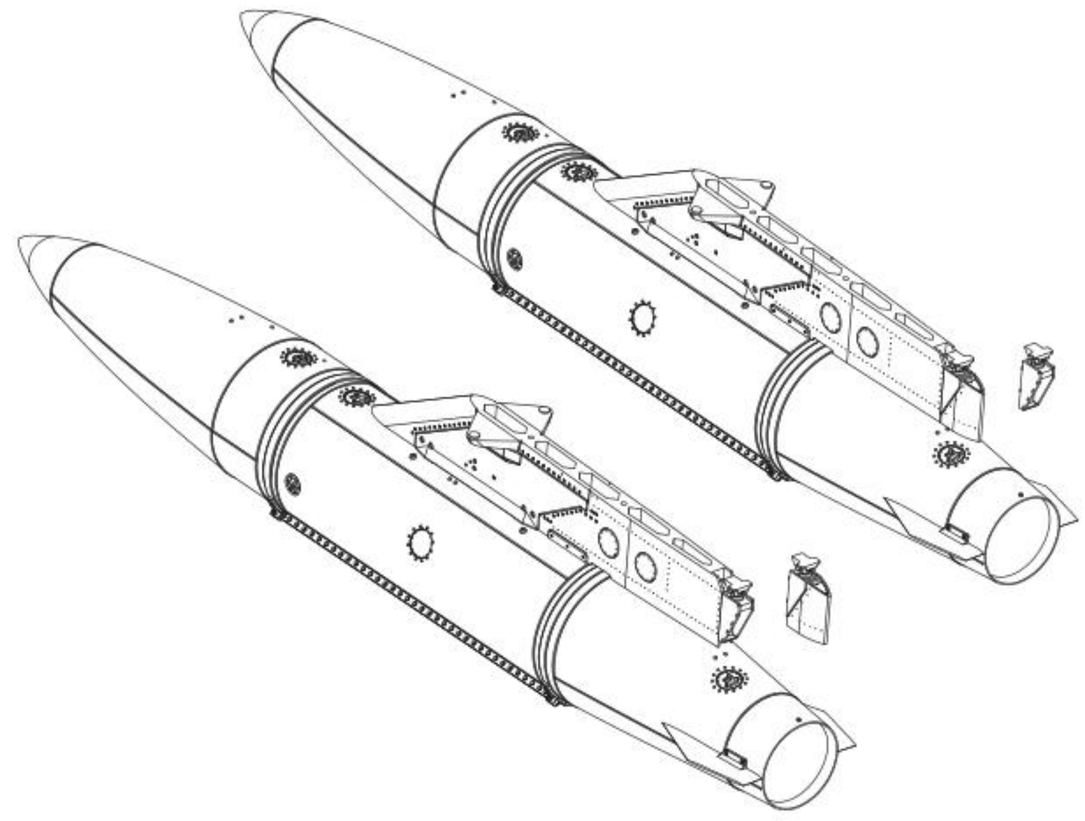

general Issues: info@reskit.com.ua / claim resolution: claims@reskit.com.ua

RESKIT-MODELS.COM

fb.com/reskit.official instagram.com/reskit_official pinterest.com/reskit_official

RESKIT™ RESIN PARTS FOR SCALE PLASTIC KITS

370 GALLON WING FUEL TANKS

WITH PYLONS (TYPE 1) FOR F-16 (2 PCS)

DECALS INSTRUCTION RSU32-0145

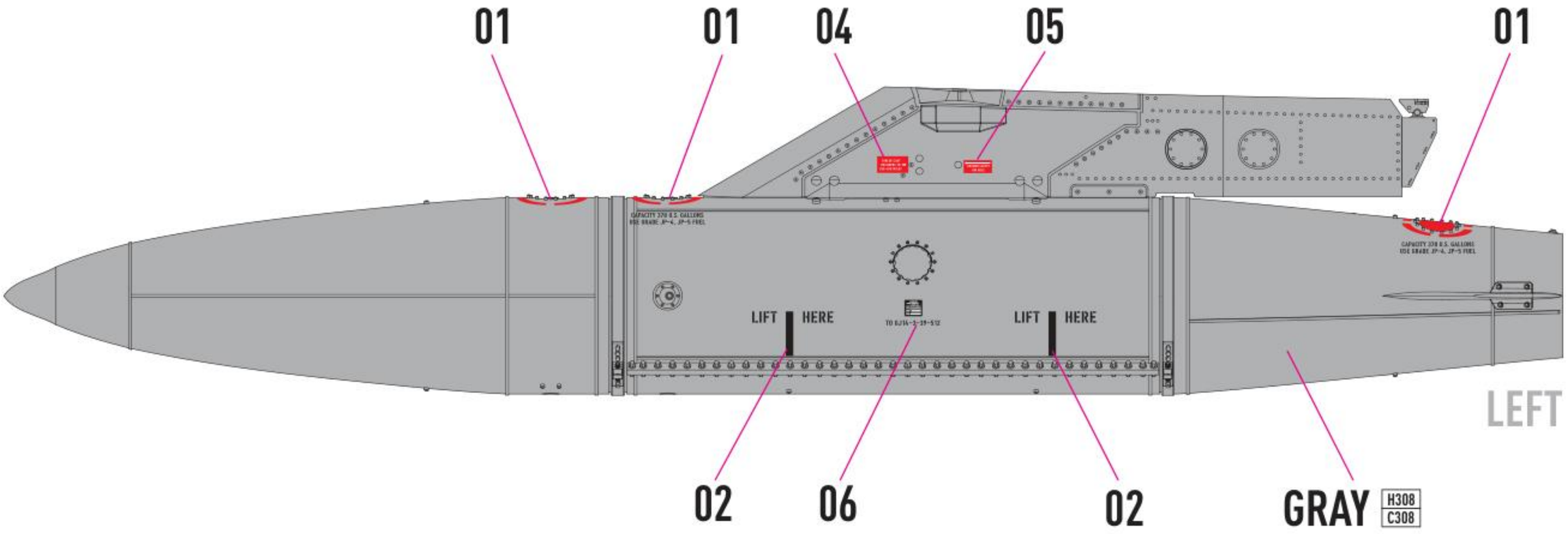

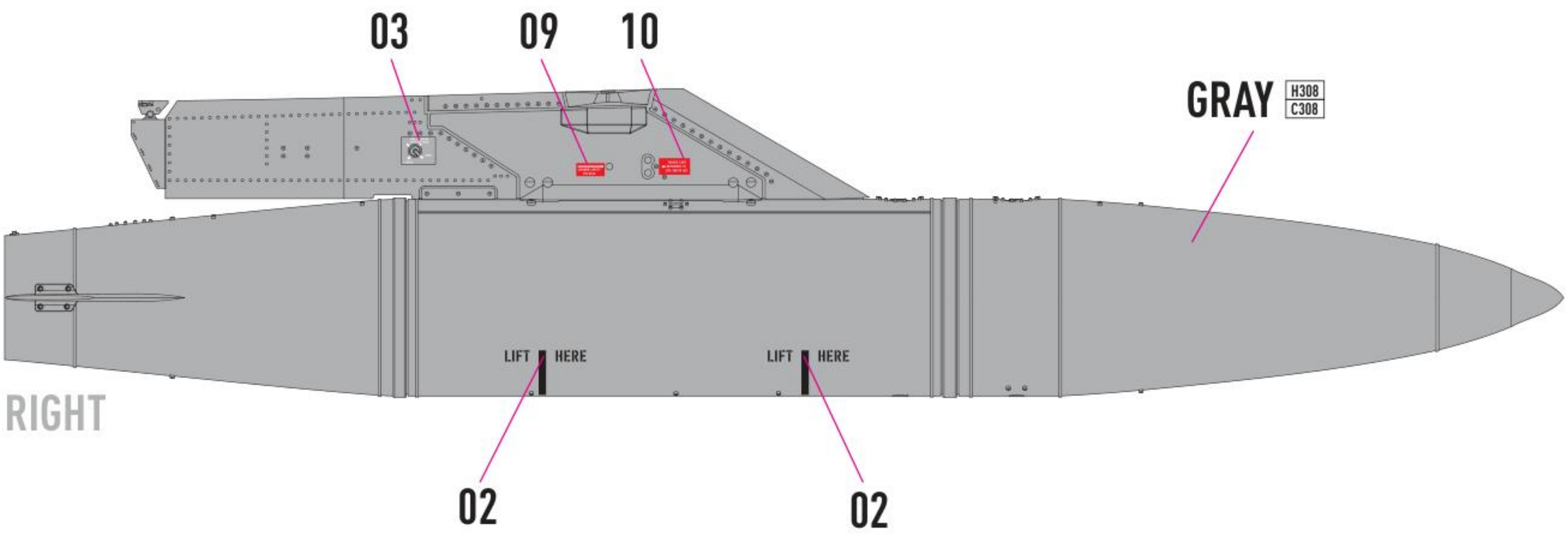

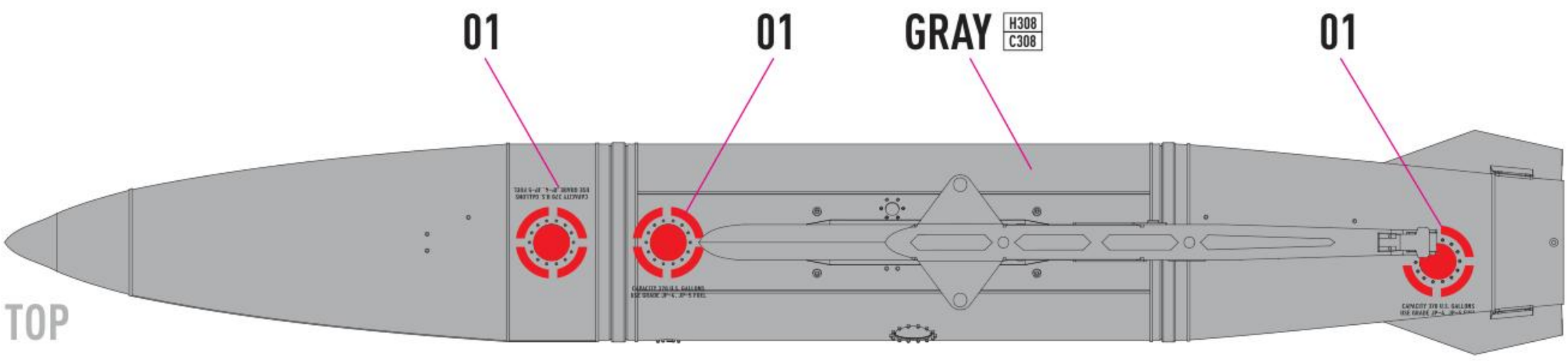

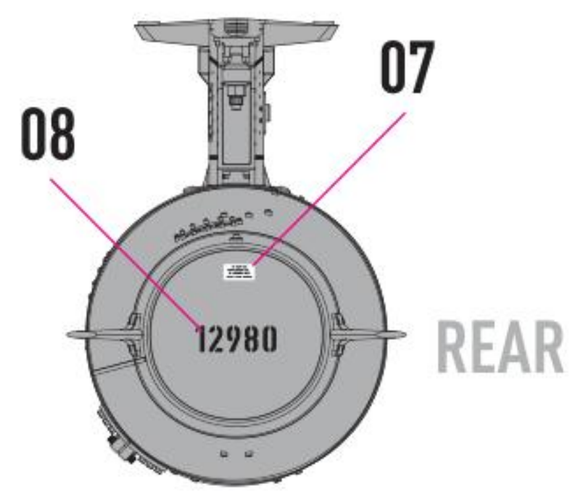

	COLORS	GUNZE / AQEOUS	GUNZE / MR.COLOR
	GRAY	H308	C308

general Issues: info@reskit.com.ua / claim resolution: claims@reskit.com.ua

RESKIT-MODELS.COM

fb.com/reskit.official instagram.com/reskit_official pinterest.com/reskit_official