RESKIT™

RESIN PARTS
FOR SCALE PLASTIC KITS

F-105 "THUNDERCHIEF" OUTBOARD
AGM-12 & AGM-45 PYLONS (2 PCS)

INSTRUCTION **RS32-0444**

DETAILS AFTER REMOVAL FROM SPRUES

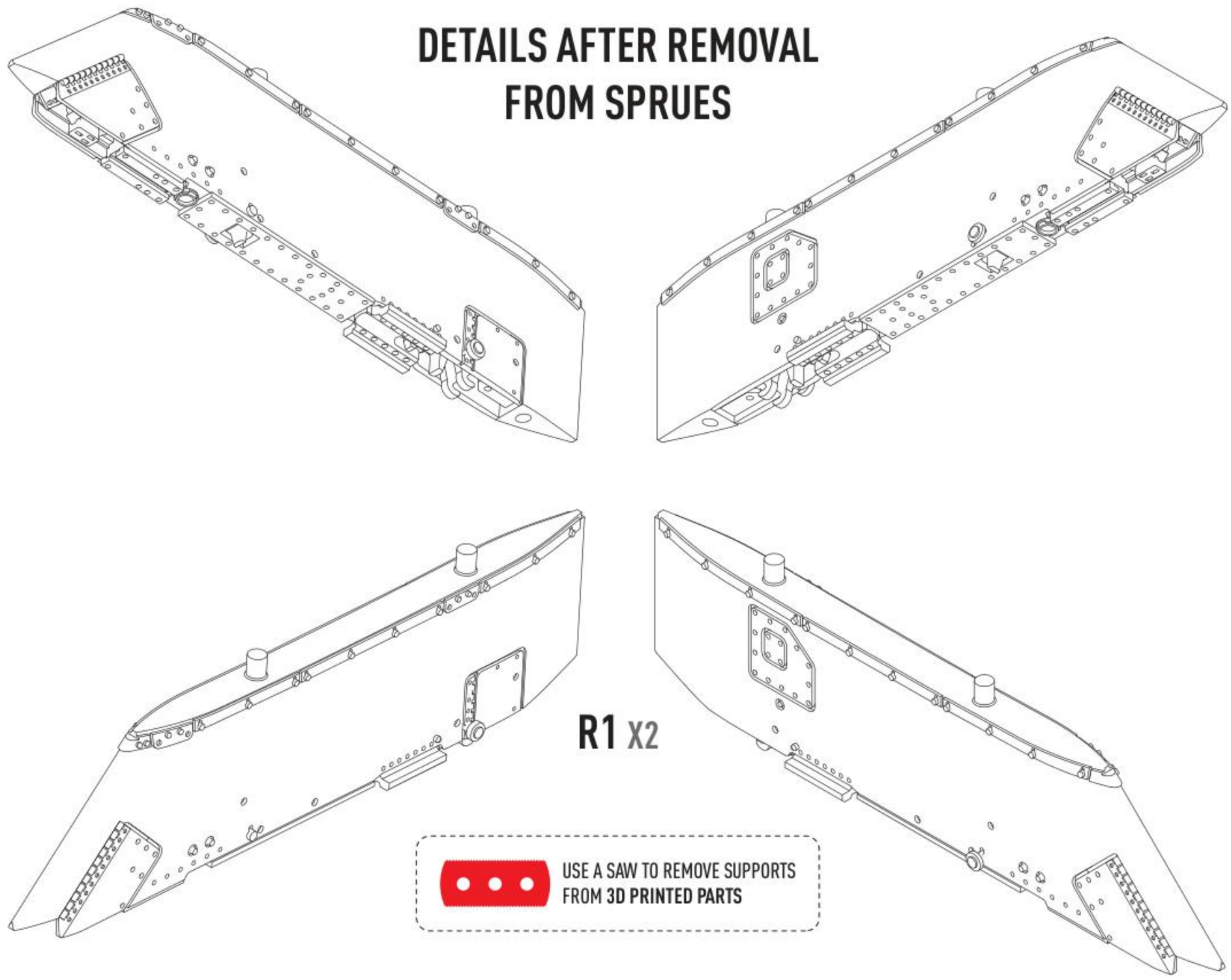

SET PYLON IN THE DIRECTION OF FLIGHT

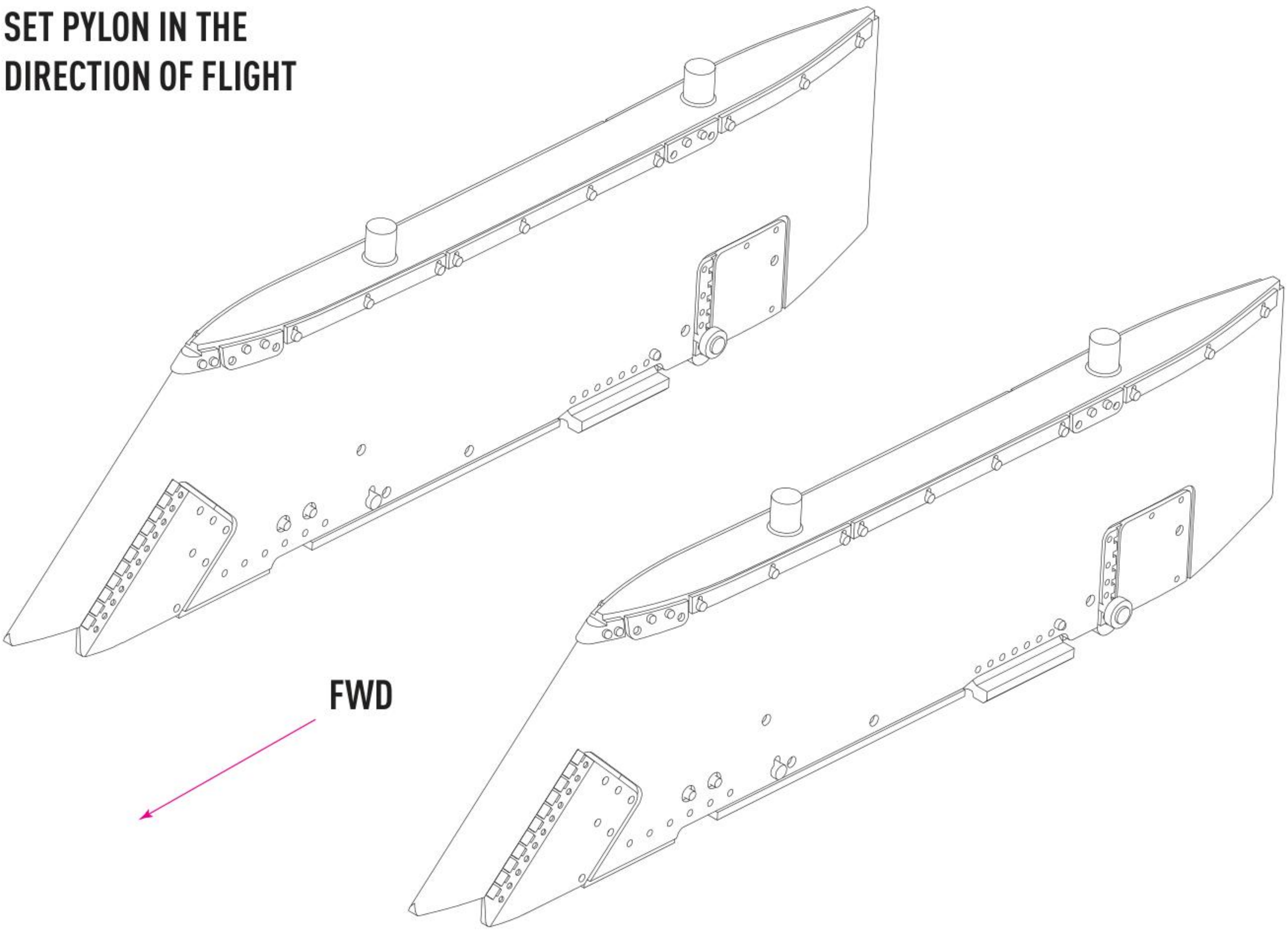

RESKIT™ RESIN PARTS FOR SCALE PLASTIC KITS

F-105 "THUNDERCHIEF" OUTBOARD
AGM-12 & AGM-45 PYLONS (2 PCS)
DECAL INSTRUCTION RS32-0444

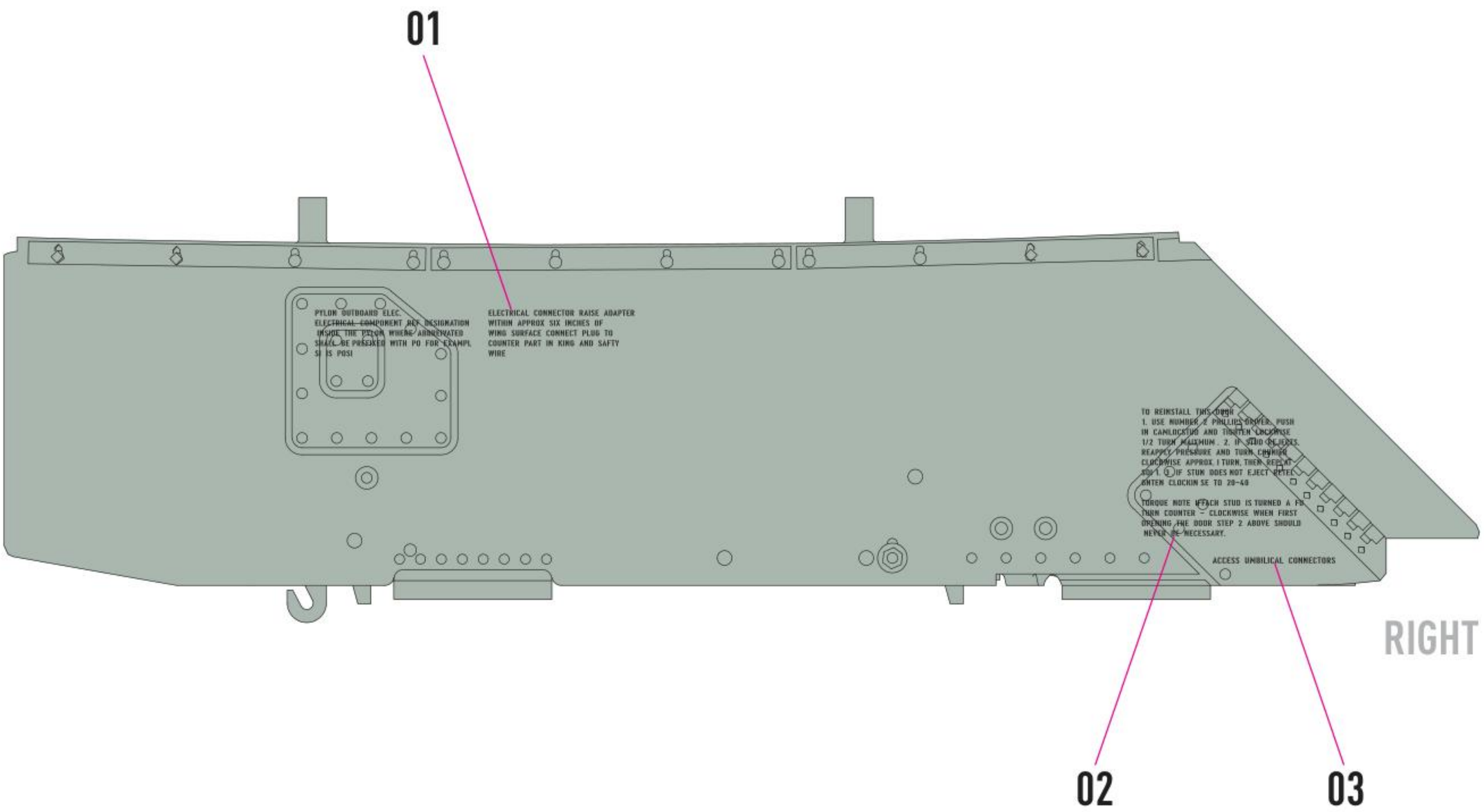

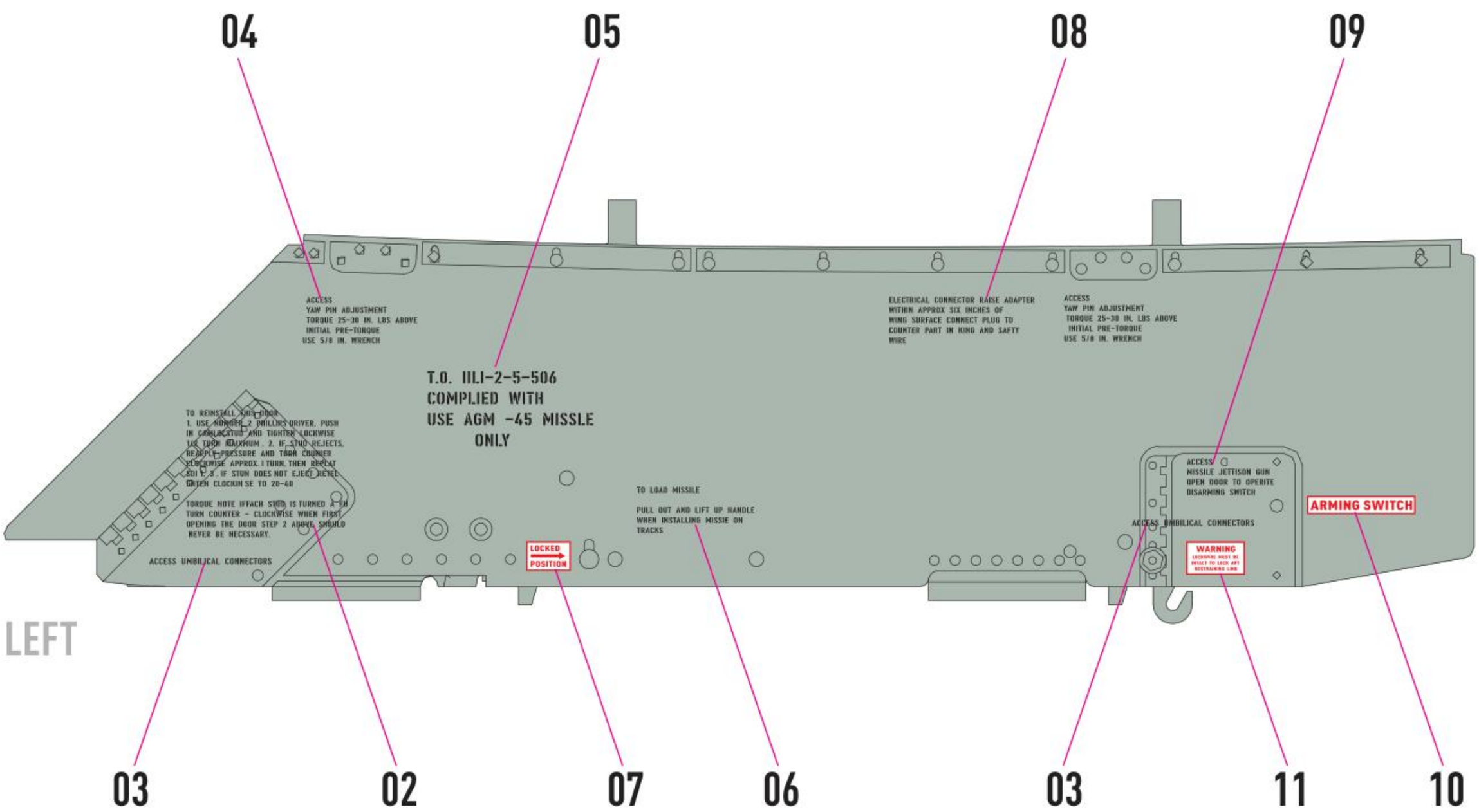

PAINT PYLONS IN THE COLOR OF THE AIRCRAFT

general Issues: info@reskit.com.ua / claim resolution: claims@reskit.com.ua

RESKIT-MODELS.COM

fb.com/reskit.official instagram.com/reskit_official pinterest.com/reskit_official