MODERN ARMY
WATER CANS, BIG SET

INSTRUCTION **AVU35-0004**

USE A SAW TO REMOVE SUPPORTS FROM **3D PRINTED PARTS**

DETAILS AFTER REMOVAL FROM SUPPORTS

R2 X4

R3 X4

R1 X4

R4 X4

R5 X4

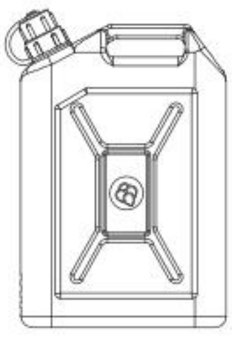

R6 X4

R7 X4

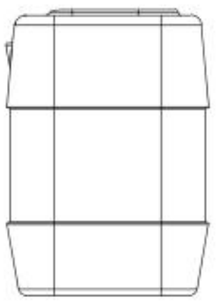

R8 X4

R9 X4

R11 X5

R10 X20

1

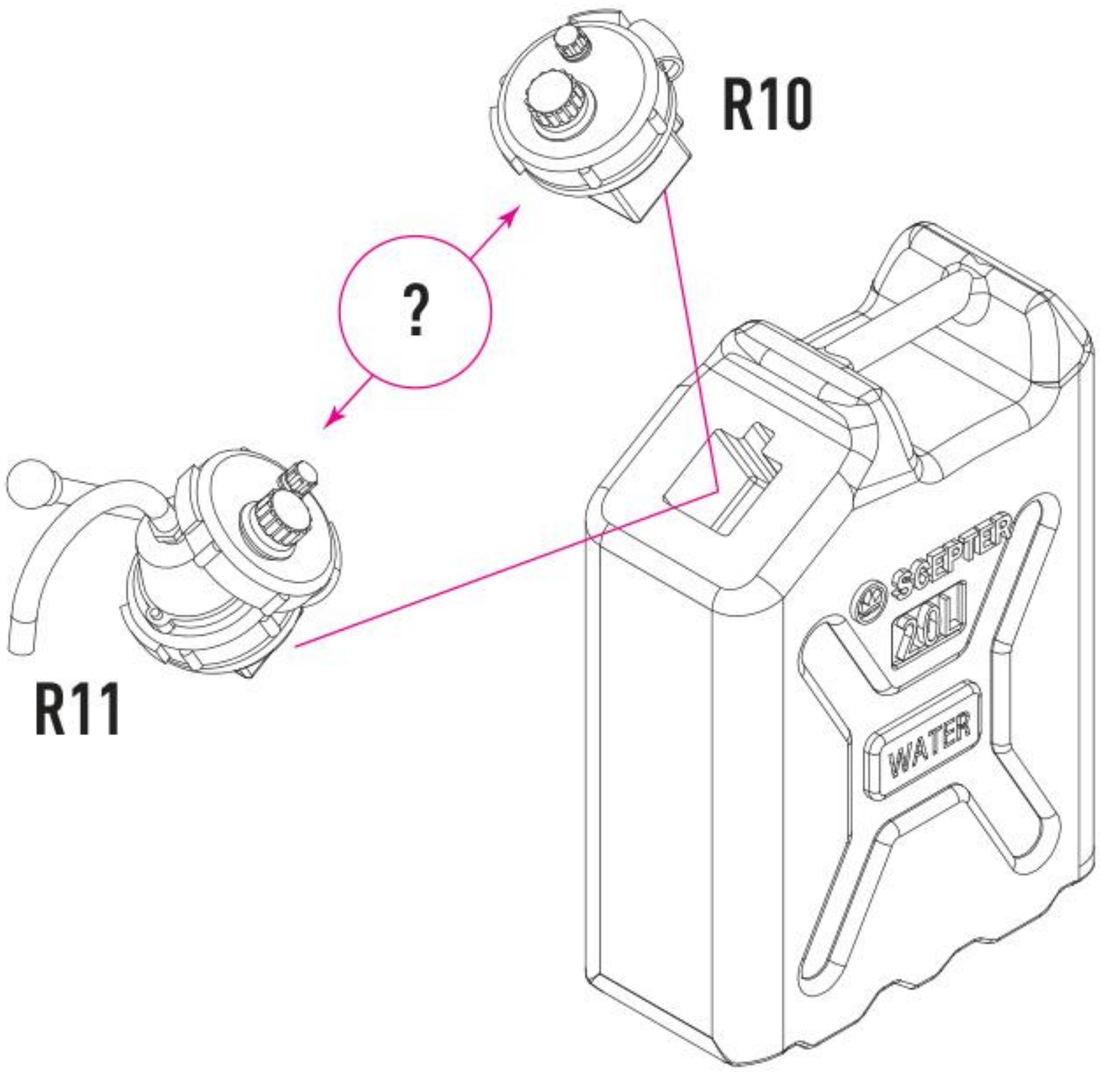
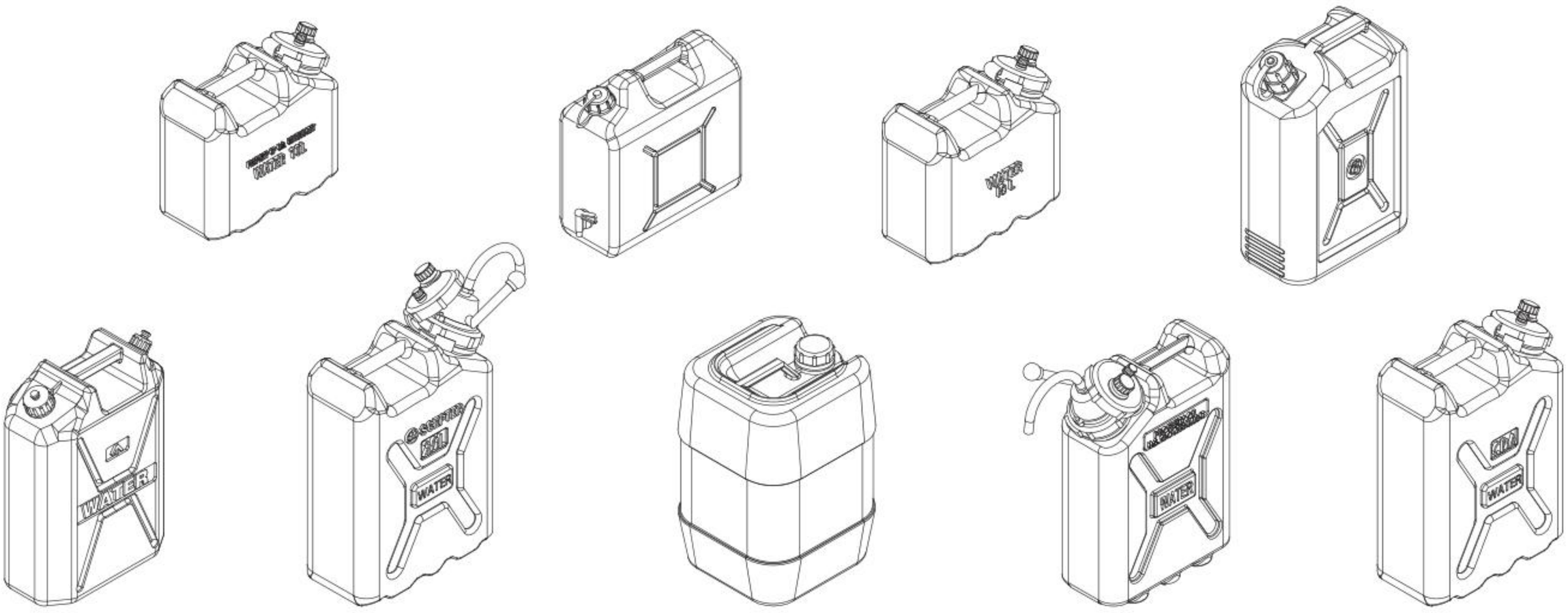
R1 or R2 or R3 or R4 or R9